HMD-964

Full-motion TV wall mount

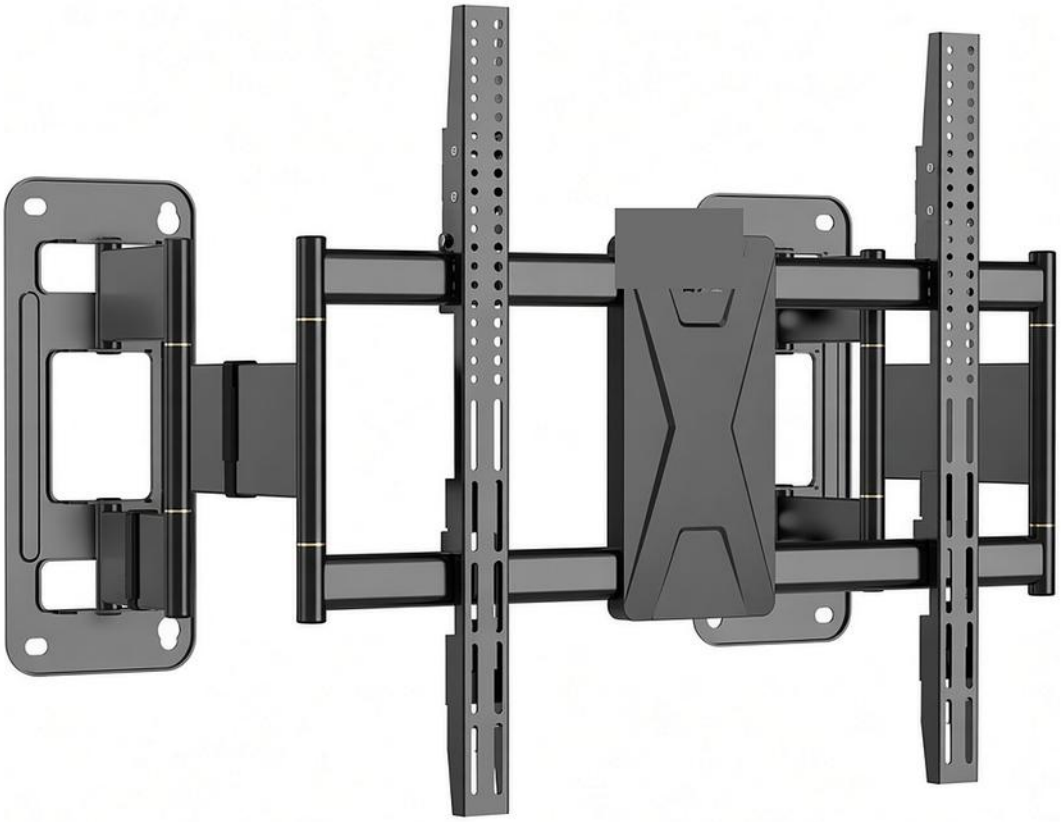

Fit Screen Size 65″–90″	Weight Capacity 90 kg	VESA 100×100–600×600 mm
Profile to Wall 39–438 mm	Wall Plate 370×160 mm	Mounting Bracket Width 735 mm