HMD-957W

MOBILE TV STAND



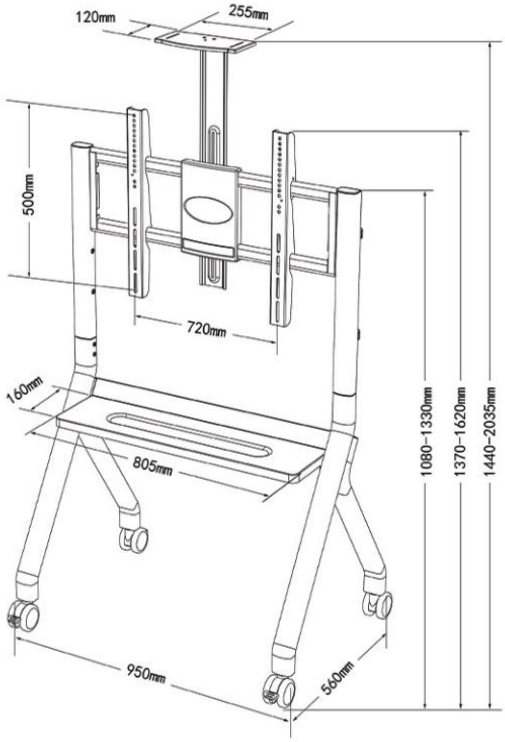

Fit Screen Size	Weight Capacity	Max.VESA
55"-100"	120 kg	940*600mm

