CATALOGUE

HAMOOD

TV WALL Mount



www.hamoodtv.com
sales@hamoodtv.com
+966 591690076











MODERN TV WALL MOUNT

Let’s Explore Our Range

TV WALL MOUNT

HAM-1175



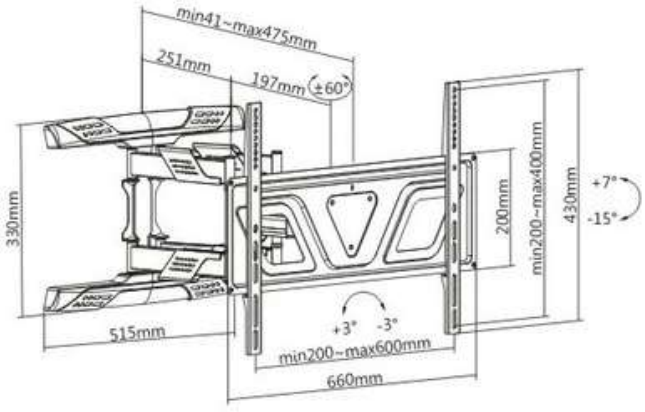

Fit Screen Size: 37"-80"

230

HAM-134B



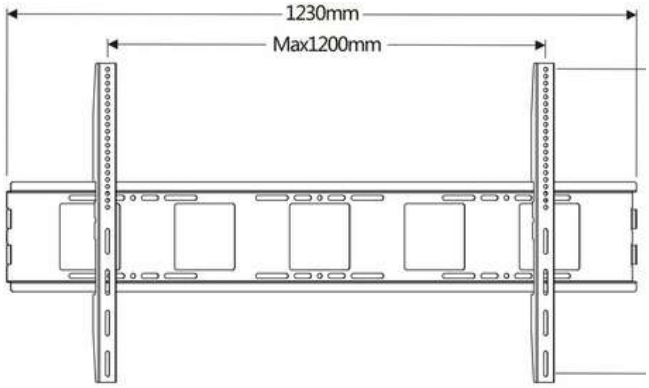

Product Size: 1230*625*35mm **TV Size: 42''-110''**

150

HAM-408

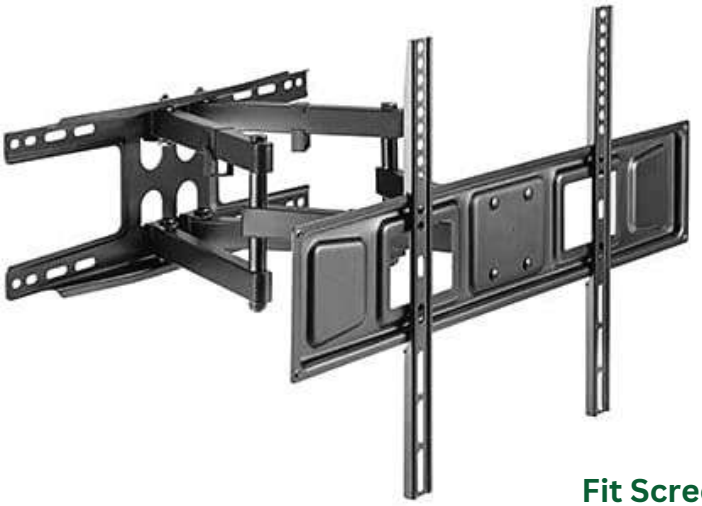

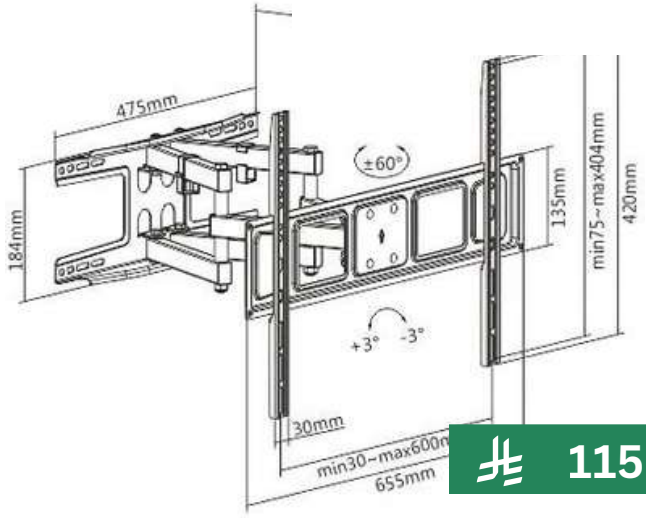

115

Fit Screen Size: 32"-70"

TV WALL MOUNT

HAM-701



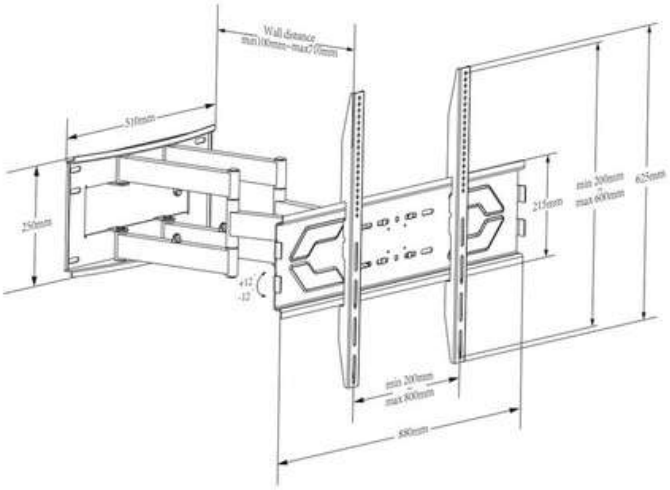

Product Size: 880*630*（100-710)mm
TV Size: 50-100"

230

HMD-744



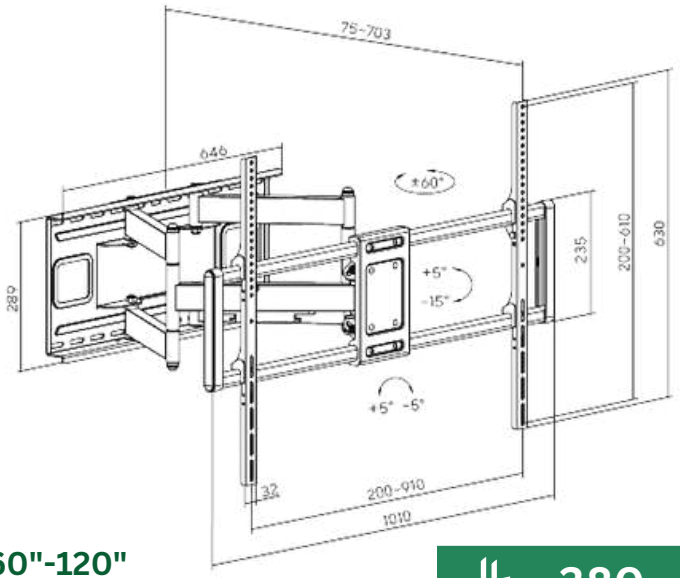

Fit Screen Size: 60"-120"

380

HAM-164



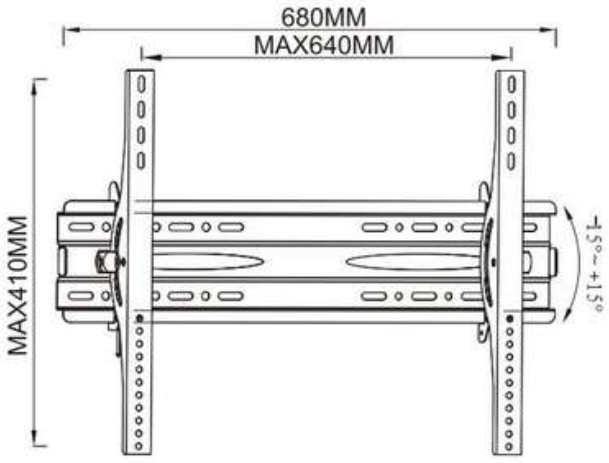

Fit Screen Size: 32-70"

60

TV WALL MOUNT

HAM-901

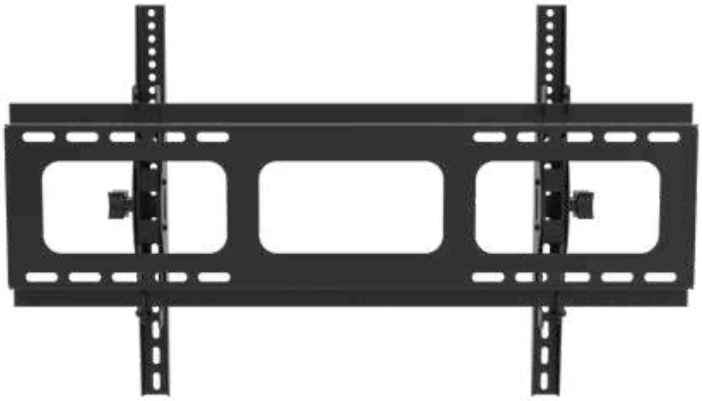

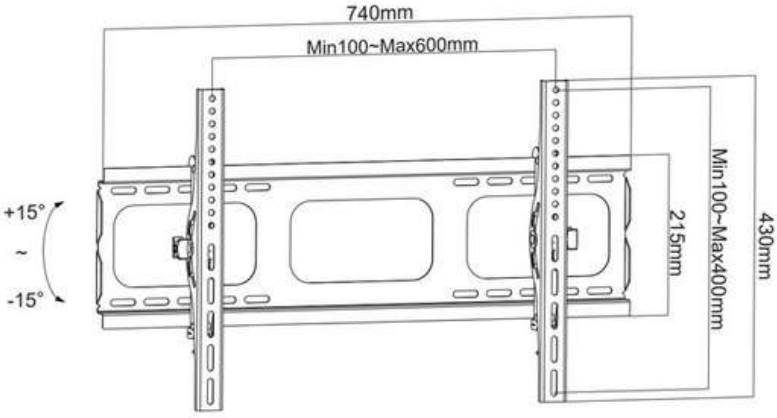

Product Size: 750x425x55mm
Suggested TV Size: 37-85"

80

HAM-902

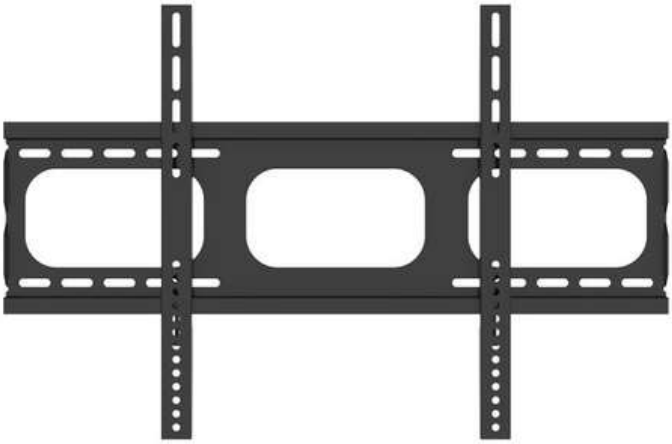

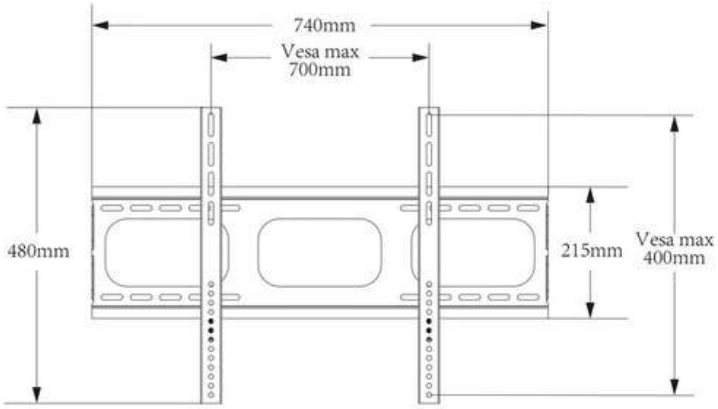

Product Size: 750x425x55mm
Suggested TV Size: 37-85"

70

HAM-999



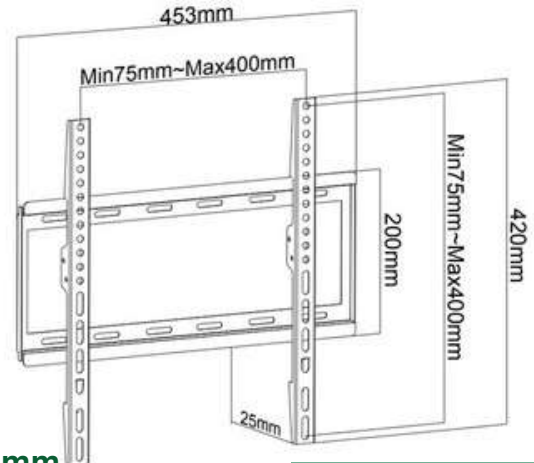

Product Size: 450*420*210mm
Suggested TV Size: 25-55"

30

TV WALL MOUNT

HAM-501



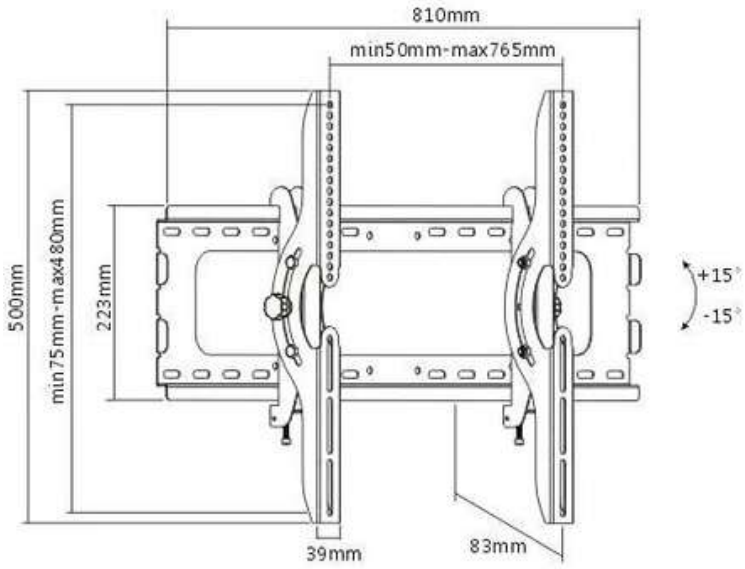

Fit Screen Size: 37"-85"

115

HAM-502



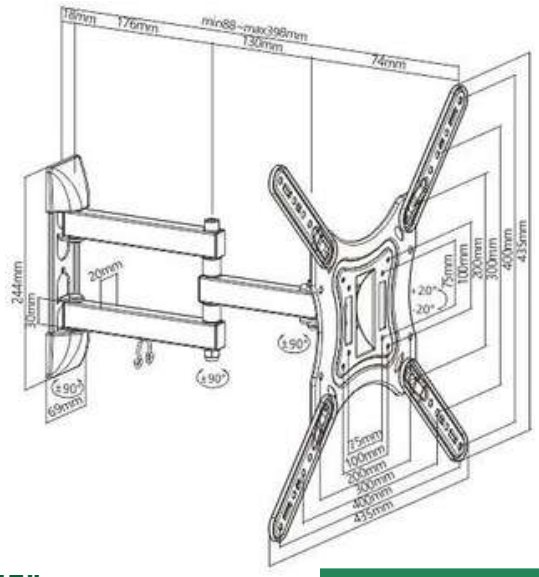

Fit Screen Size: 23"-55"

50

HAM-503



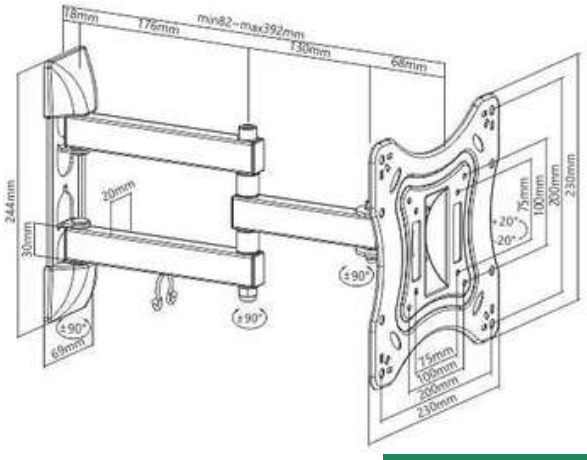

Fit Screen Size: 23"-42"

60

TV WALL MOUNT

HAM-504



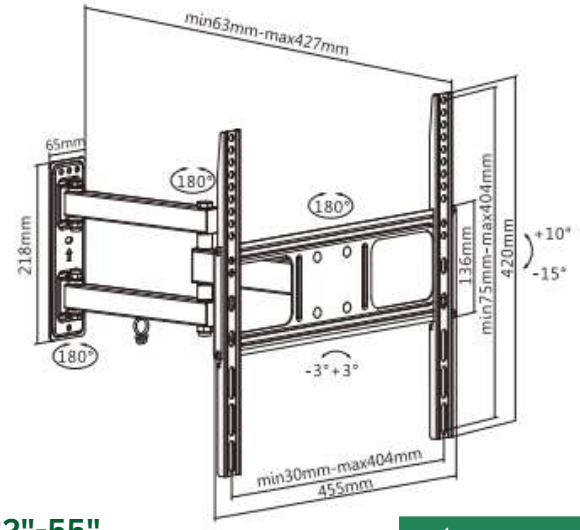

Fit Screen Size: 32"-55"

60

HAM-505



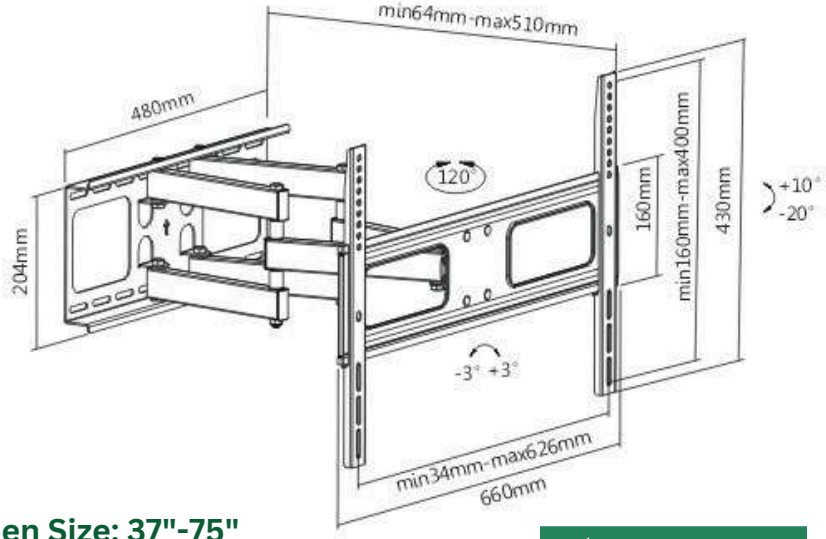

Fit Screen Size: 37"-75"

170

HAM-076



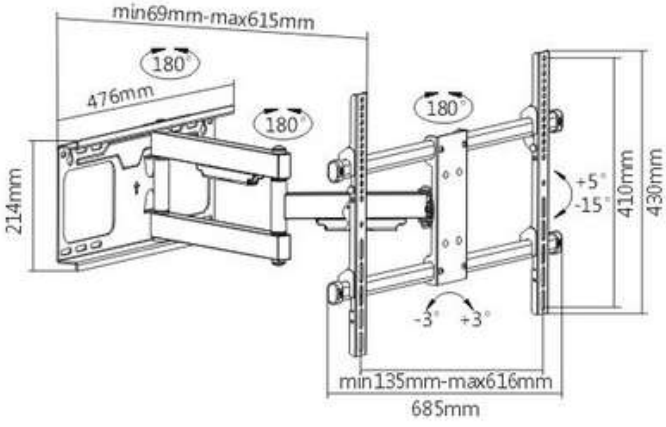

Fit Screen Size: 37"-70"

200

TV WALL MOUNT

HAM-786



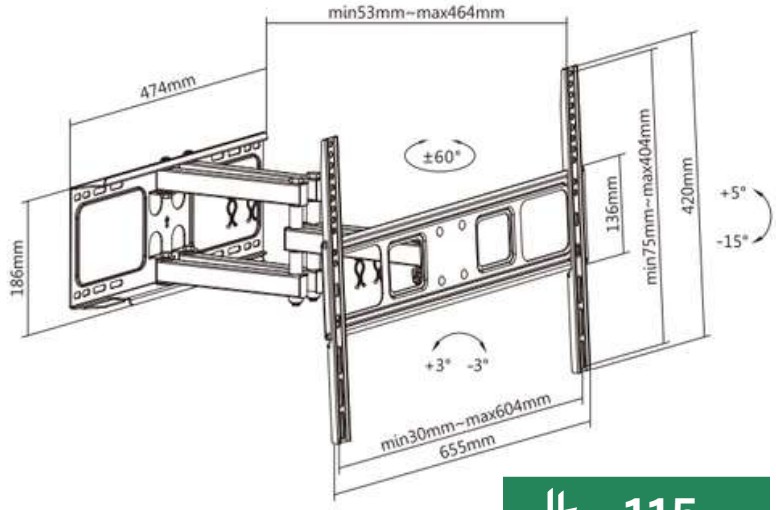

Fit Screen Size: 32"-70"

115

HMD-725



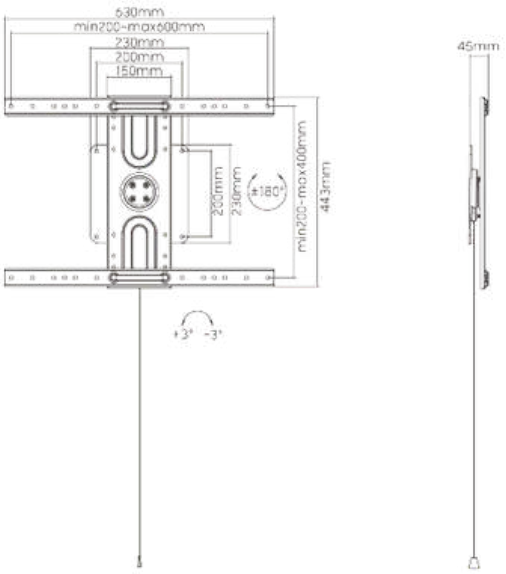

Fit Screen Size: 37"-80"

180

HAM-775



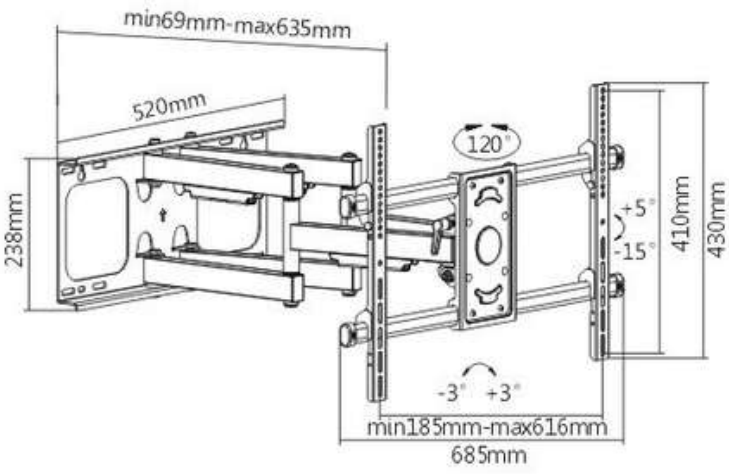

Fit Screen Size: 37"-80"

250

TV WALL MOUNT

HAM-184



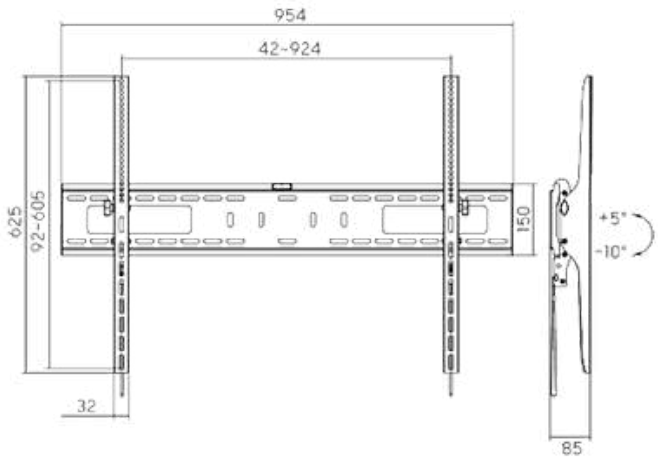

Fit Screen Size: 60"-100"

120

HAM-189



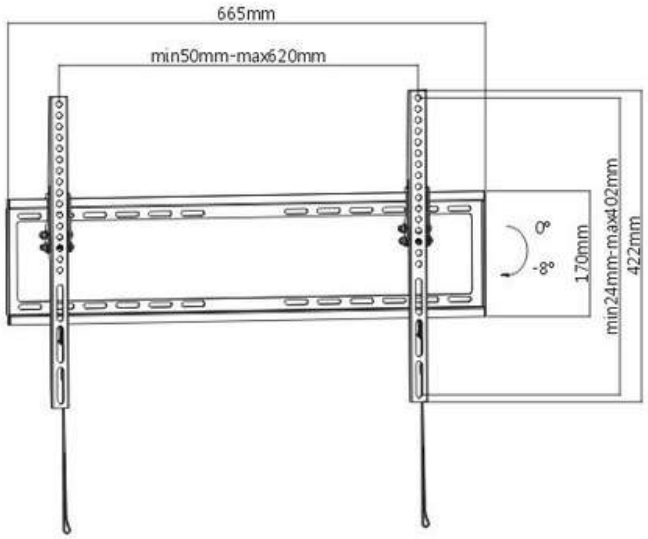

Fit Screen Size: 37"-70"

40

HAM-900



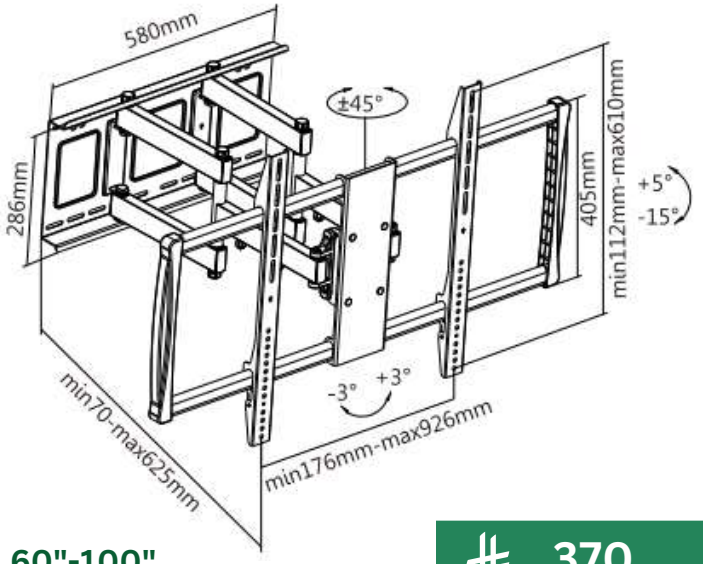

Fit Screen Size: 60"-100"

370

TV WALL MOUNT

HAM-975

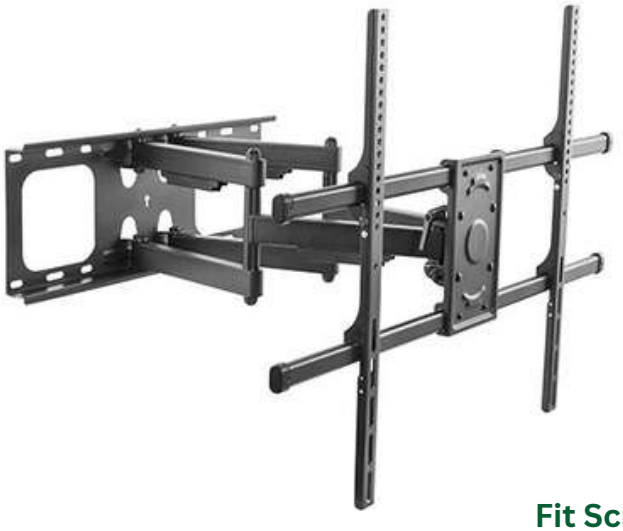

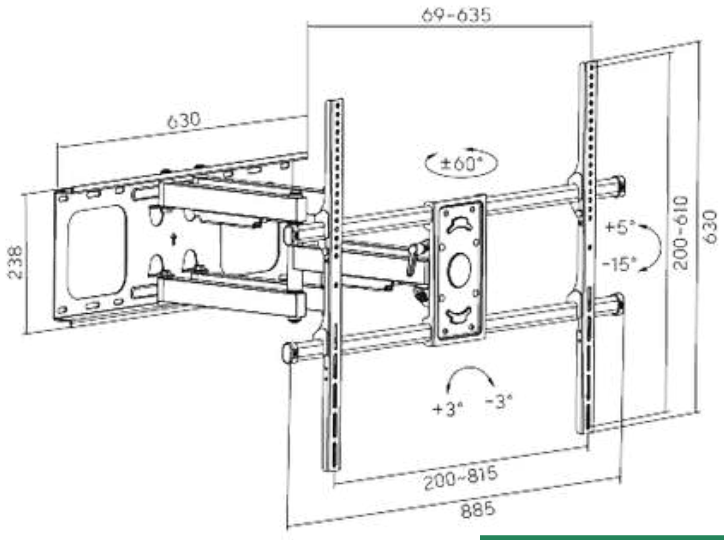

Fit Screen Size: 50"-100"

320

HAM-2026



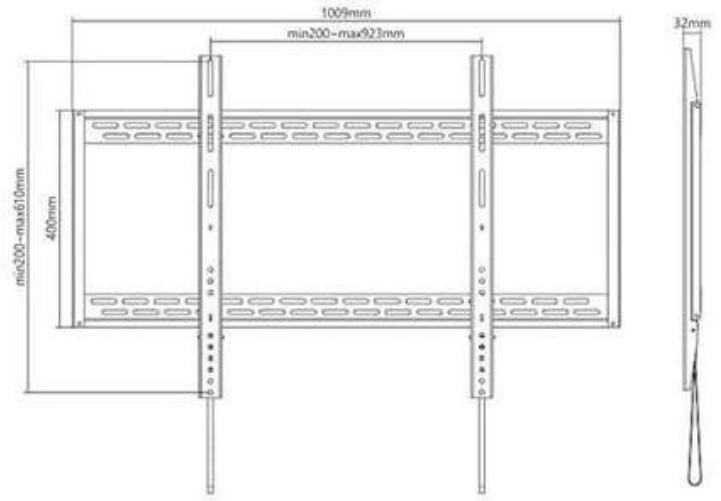

Fit Screen Size: 60"-100"

140

HAM-2027



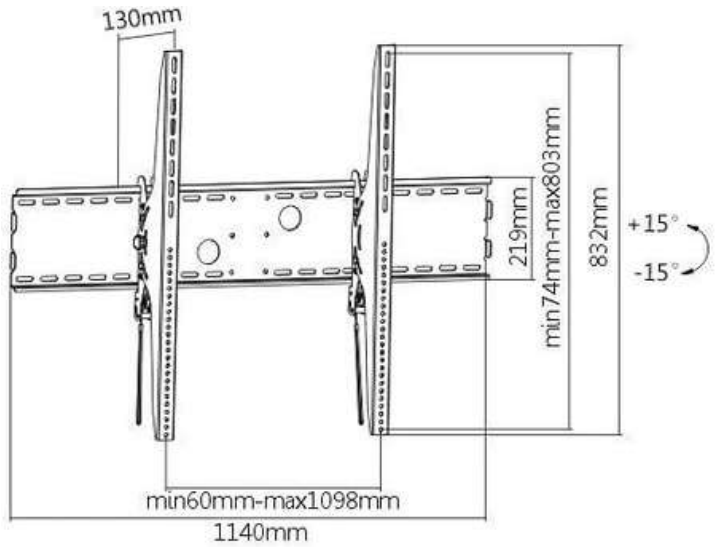

Fit Screen Size: 60"-100"

180

TV WALL MOUNT

HMD-200



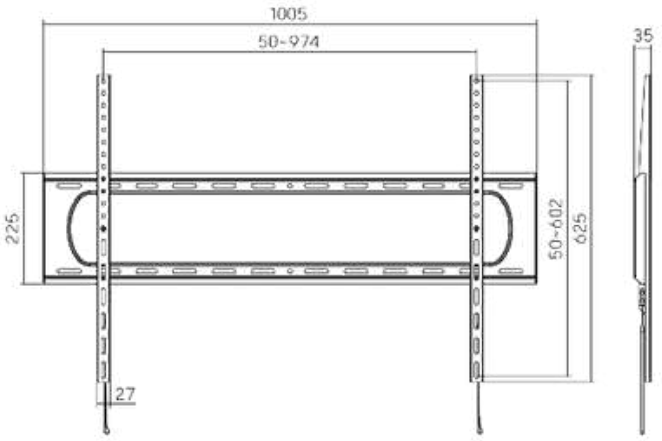

Fit Screen Size: 60"-120"

115

HMD-788



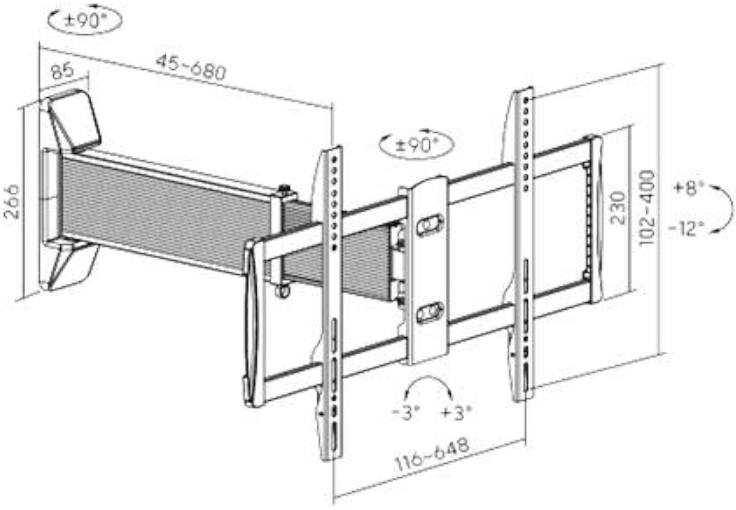

Fit Screen Size: 37"-75"

170

HMD-300



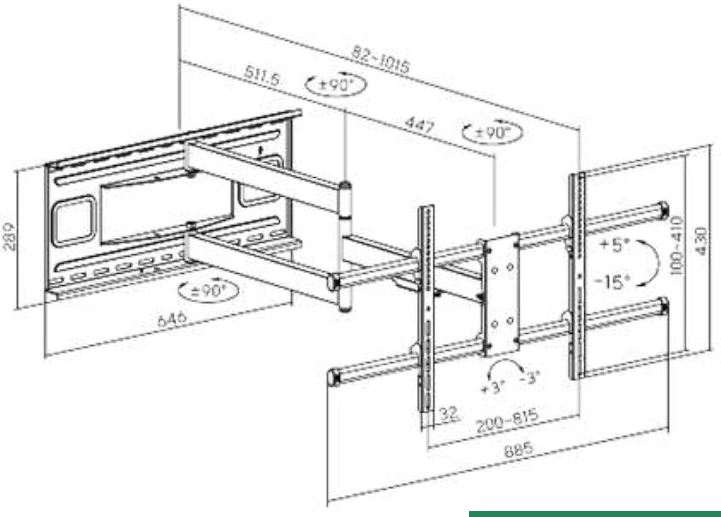

Fit Screen Size: 43"-80"

345

TV WALL MOUNT

HMD-511



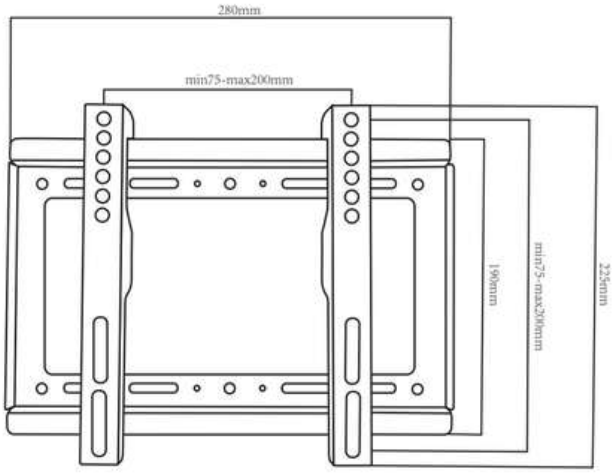

Fit Screen Size: 14"-42"

15

HMD-512



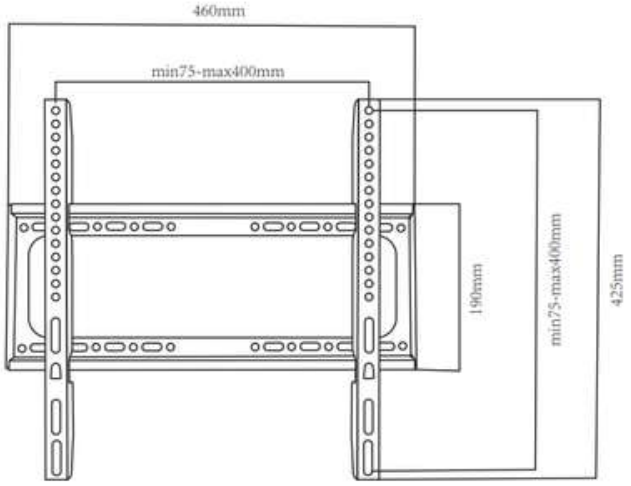

Fit Screen Size: 26"-63"

20

HMD-513

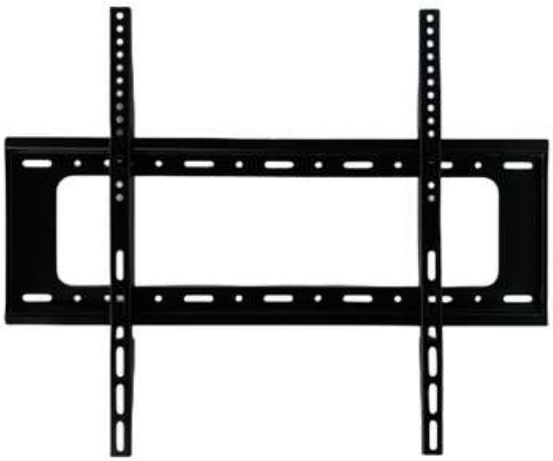

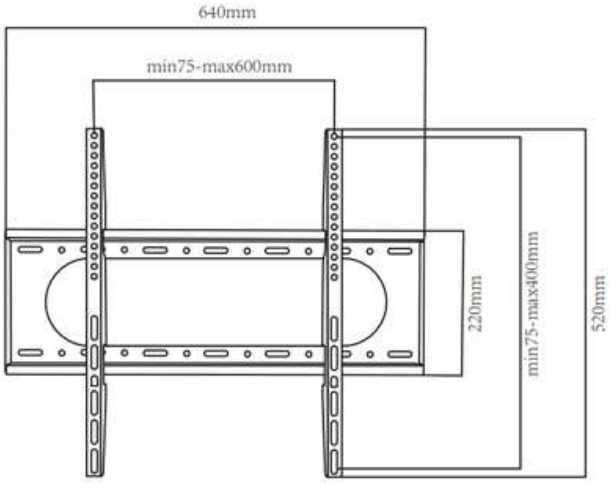

Fit Screen Size: 40"-80""

40

TV WALL MOUNT

HMD-514



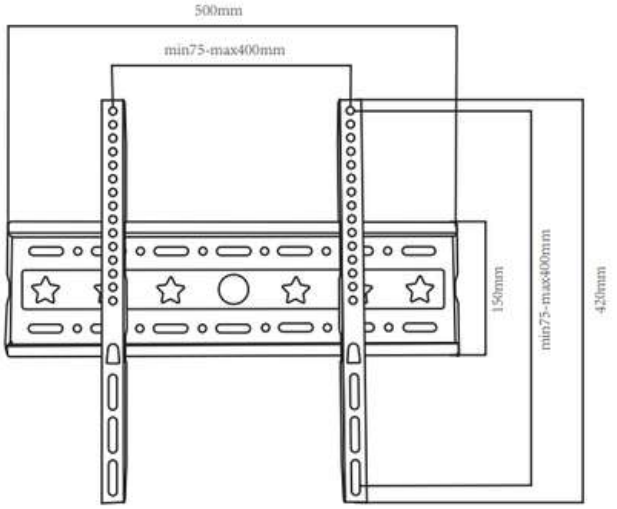

Fit Screen Size: 26"-55"

30

HMD-515



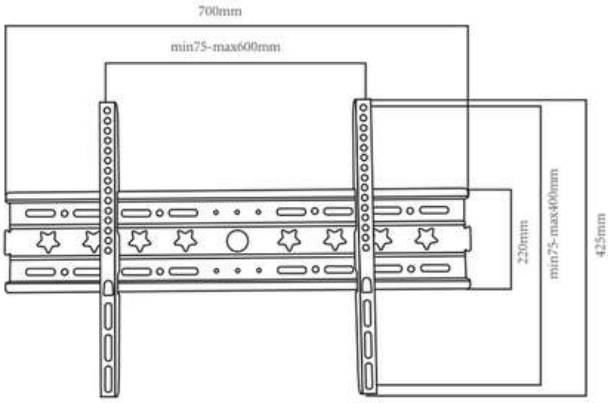

Fit Screen Size: 26"-65"

60

HMD-516



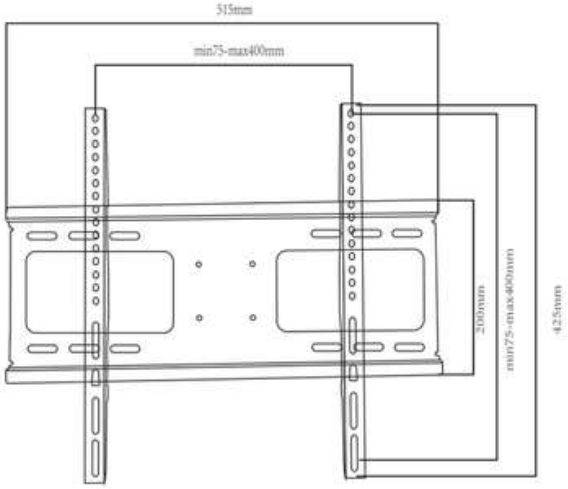

Fit Screen Size: 26"-55""

30

TV WALL MOUNT

MNL-502BB



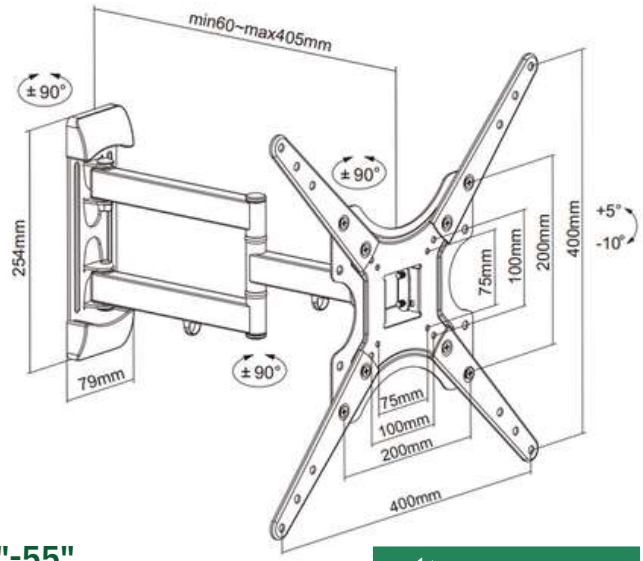

Fit Screen Size: 25"-55"

50

MNL-503BB



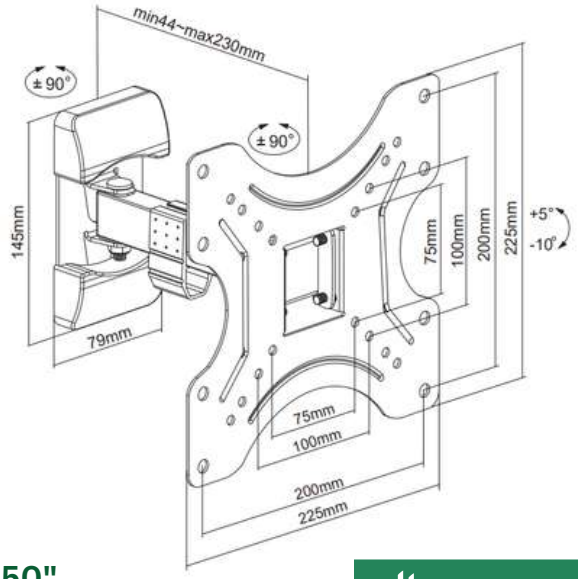

Fit Screen Size: 25"-50"

50

MNL-504BB



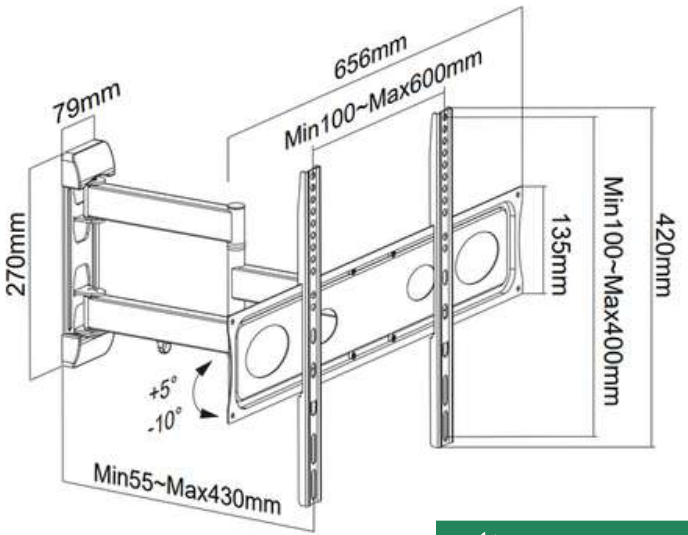

Fit Screen Size: 32"-60"

60

TV WALL MOUNT

HMD-408BB



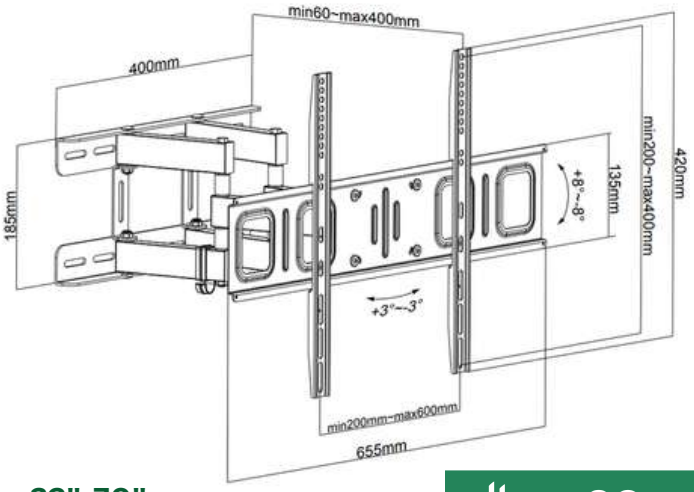

Fit Screen Size: 32"-70"

80

HAM-875



Dimensions (mm)

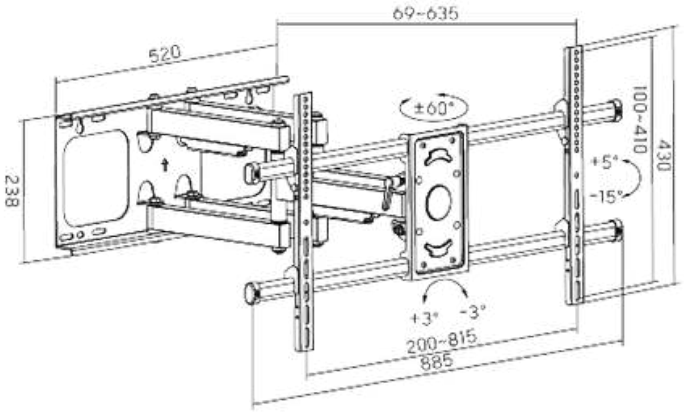

Fit Screen Size: 43"-90"

280

HMD-772

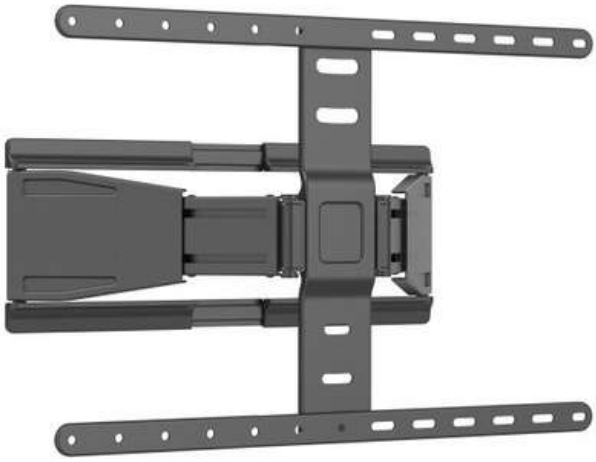

Dimensions (mm)

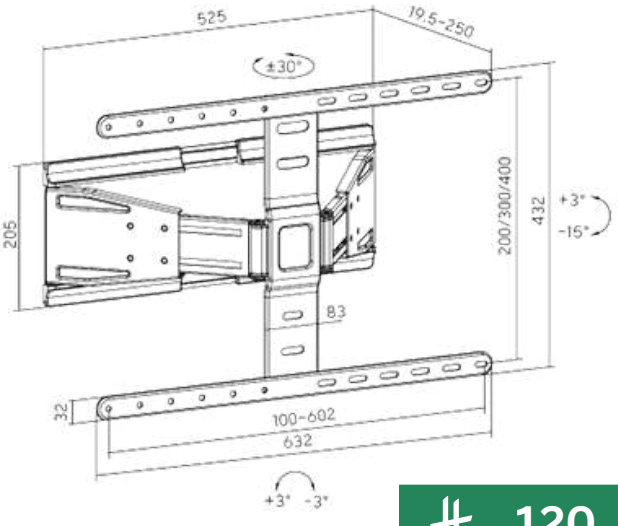

Fit Screen Size: 43"-90"

120

TV WALL MOUNT

HMD-960



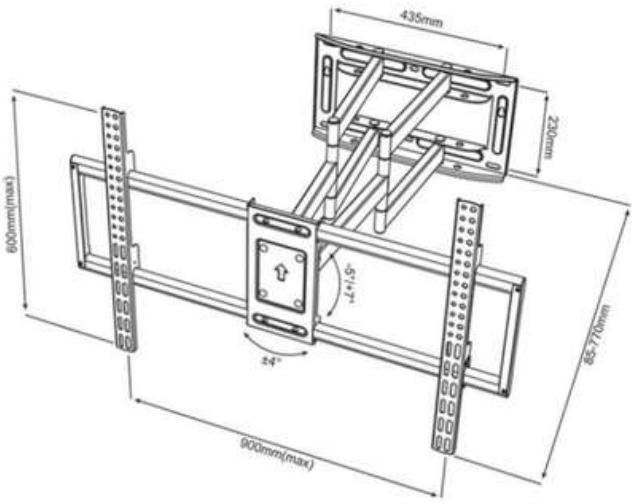

Fit Screen Size: 50”-120”

280

HAM-810



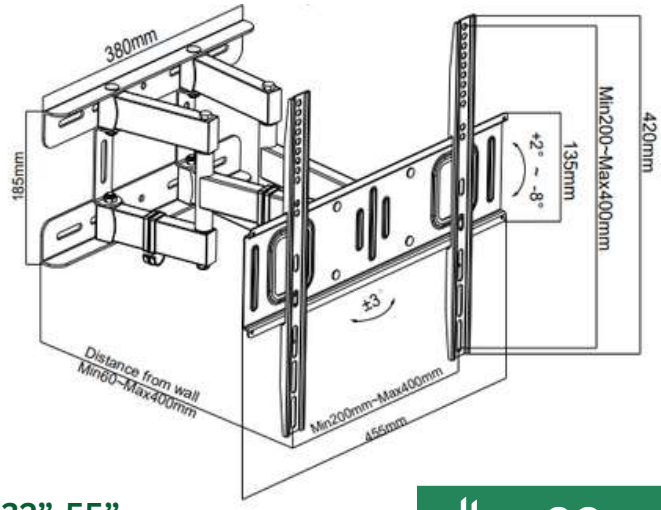

Fit Screen Size: 32”-55”

80

HAM-163



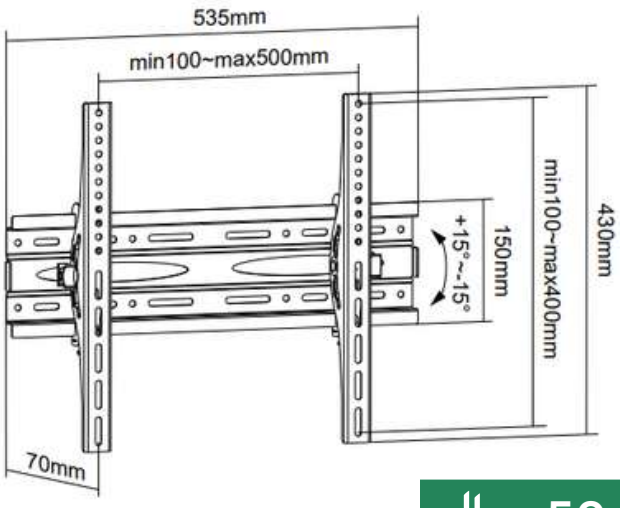

Fit Screen Size: 32”-70”

50

TV WALL MOUNT

HAM-162



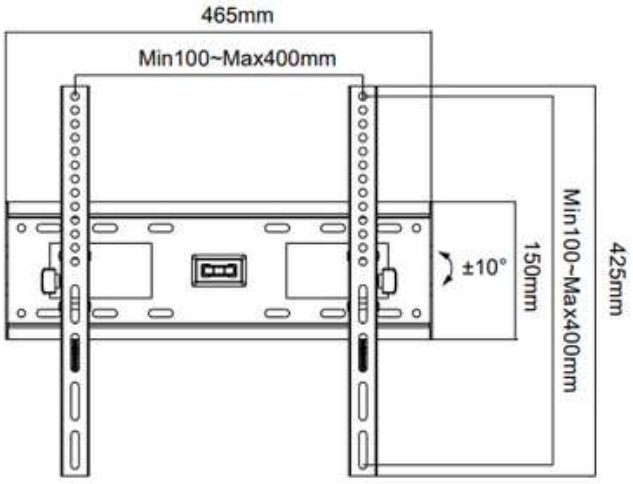

Fit Screen Size: 32”-60”

35

MNL-165



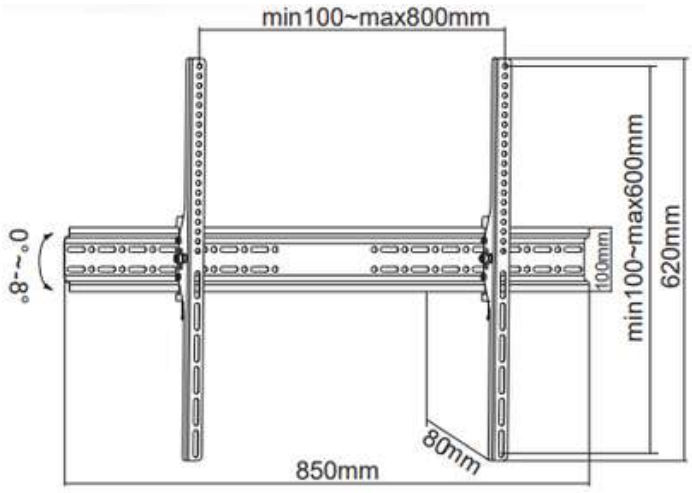

Fit Screen Size: 42”-90”

50

HMD-795

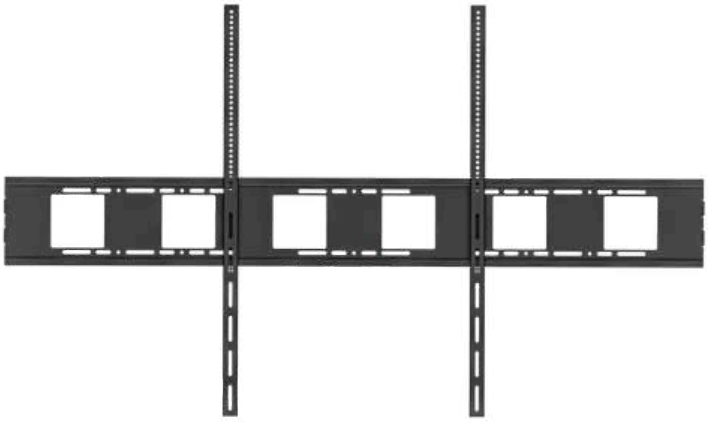

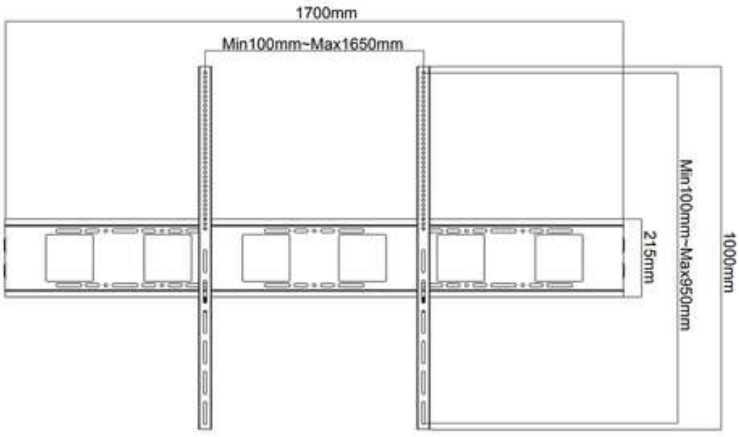

Fit Screen Size: 70”-150”

345

TV WALL MOUNT

HMD-708



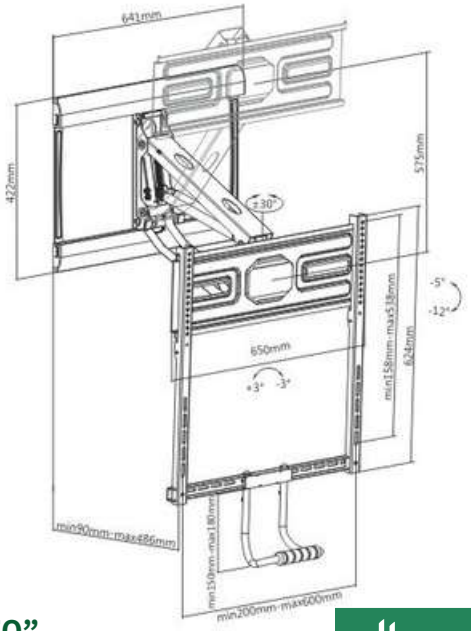

Fit Screen Size: 43”-70”

690

HMD-958

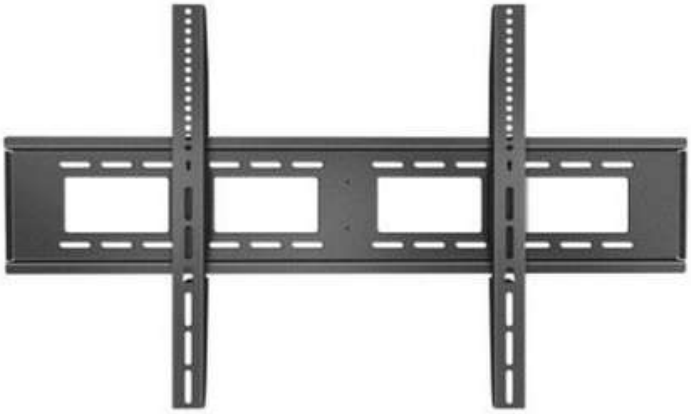

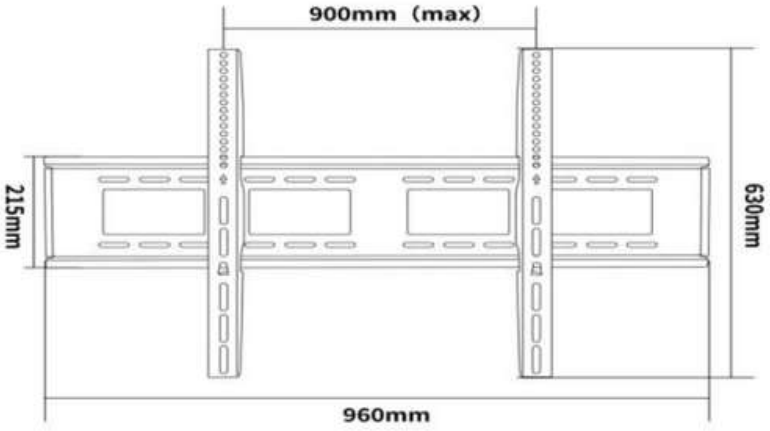

Fit Screen Size: 60”-110”

115

HMD-959



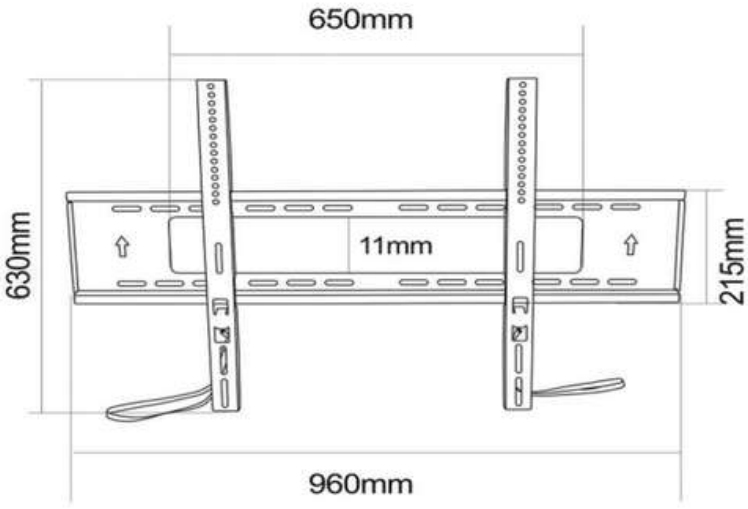

Fit Screen Size: 60”-110”

115

TV WALL MOUNT

HMD-521



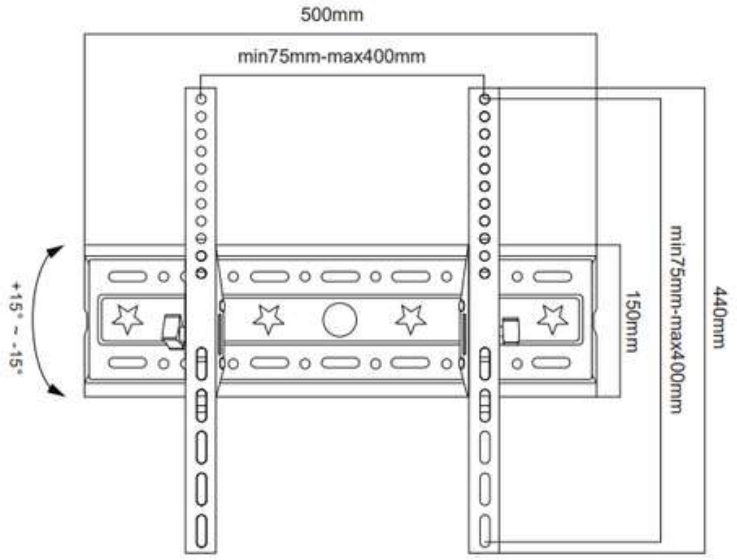

Fit Screen Size: 26"-70"

30

HMD-522



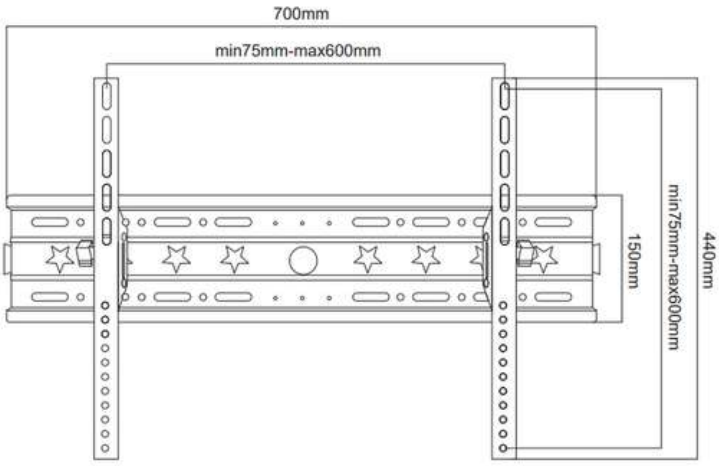

Fit Screen Size: 32”-80”

40

HMD-523



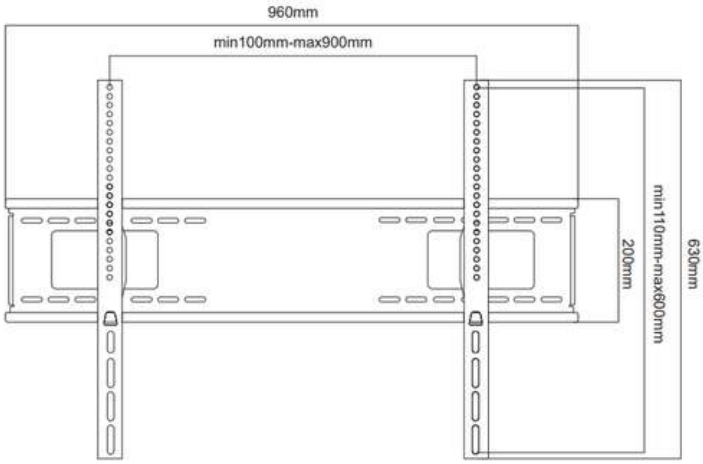

Fit Screen Size: 60”-120”

90

TV WALL MOUNT

HMD-790



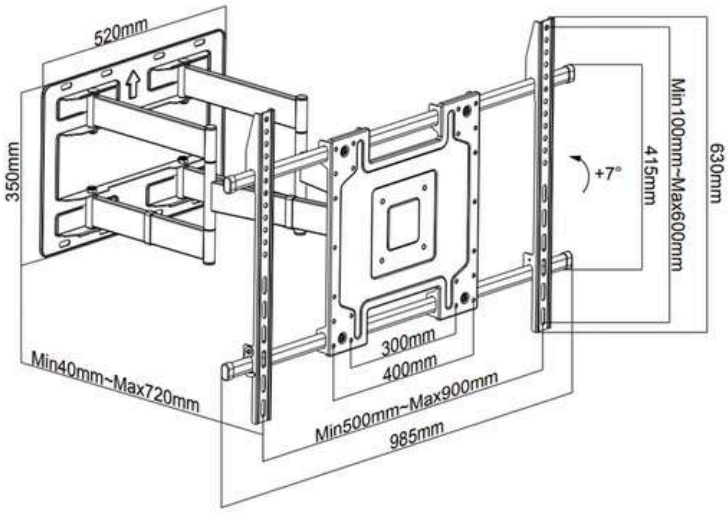

Fit Screen Size: 50"-100"

330

HMD-1414

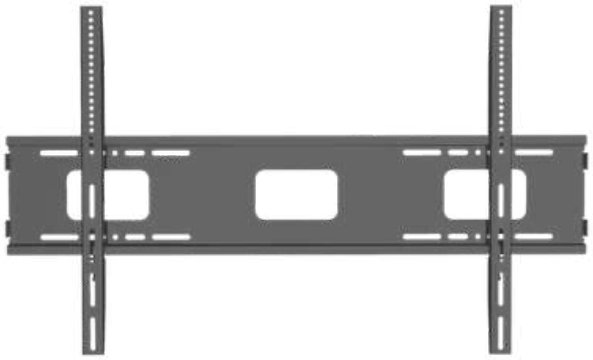

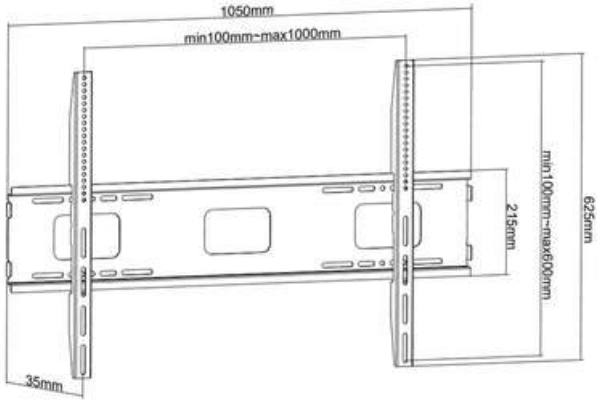

Fit Screen Size: 55”-100”

115

HMD-1413

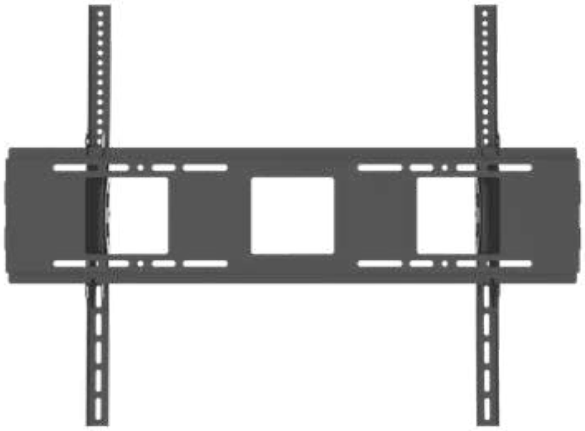

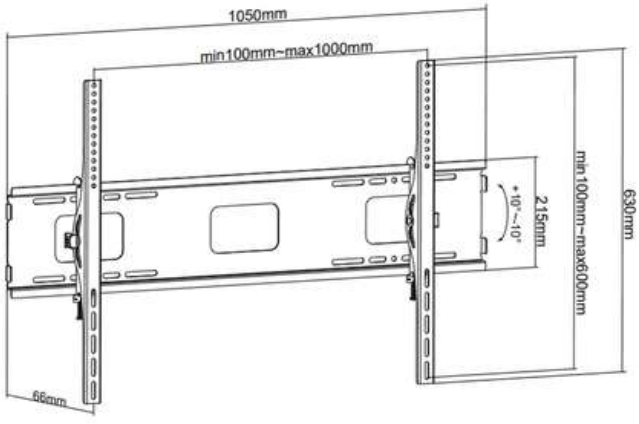

Fit Screen Size: 55”-100”

90

TV WALL MOUNT

HMD-800



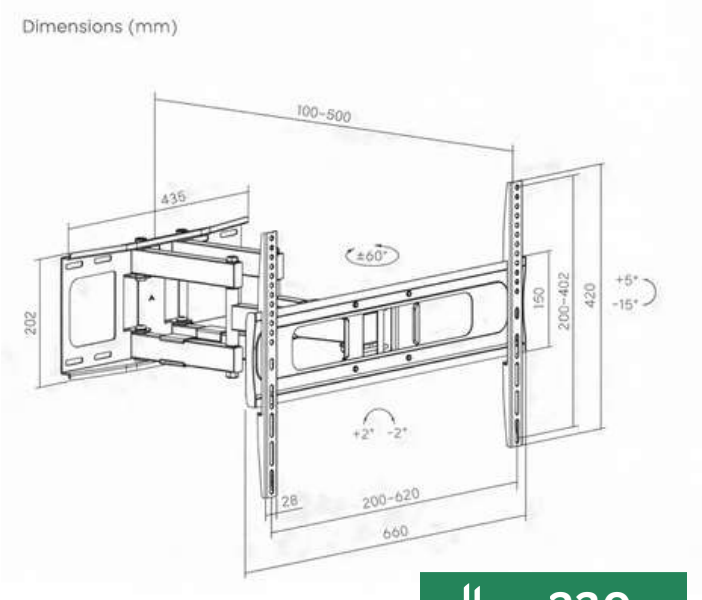

Fit Screen Size: 37"-86"

230

HMD-812

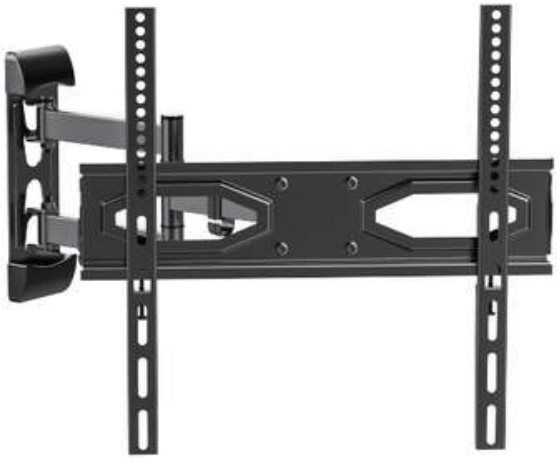

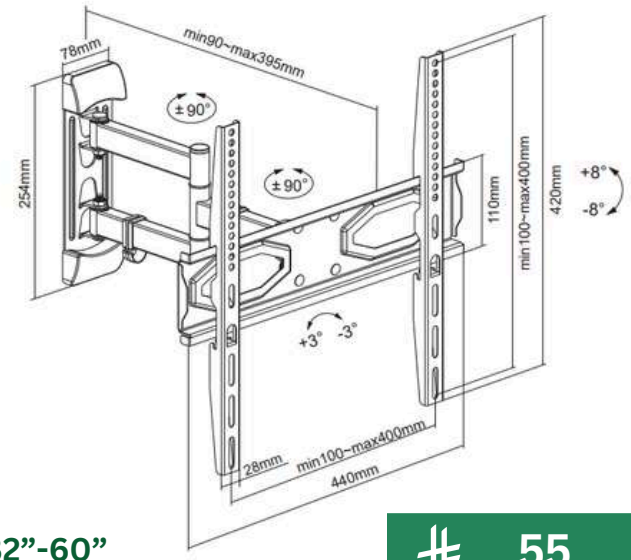

Fit Screen Size: 32”-60”

55

HMD-814



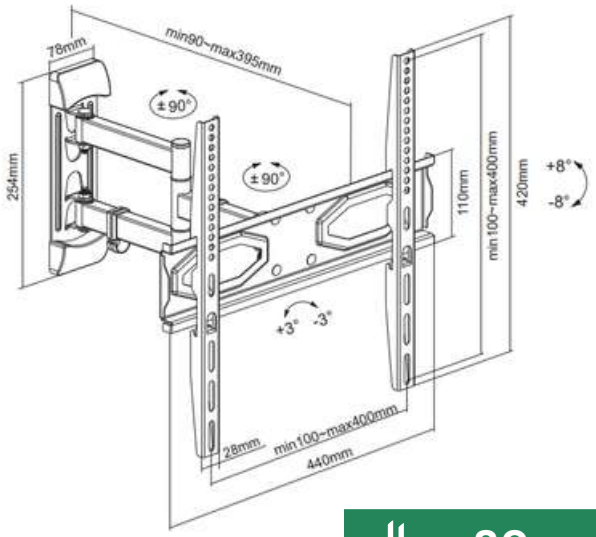

Fit Screen Size: 32”-70”

89

TV WALL MOUNT

NB-SP5

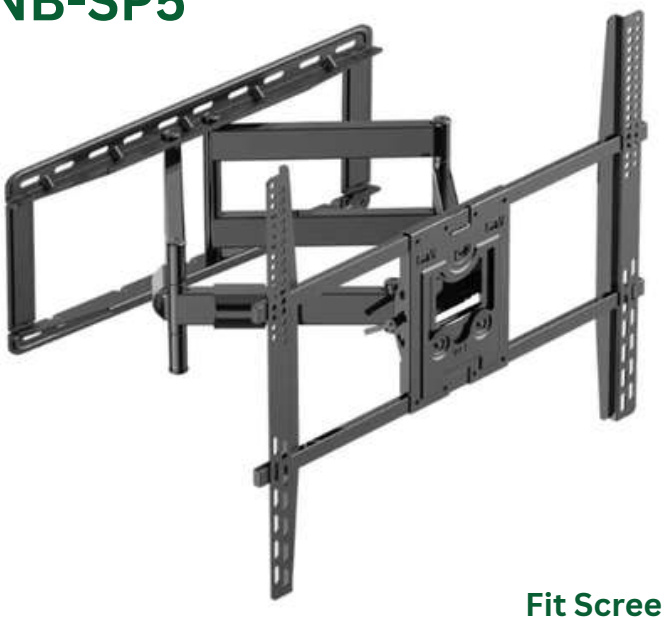

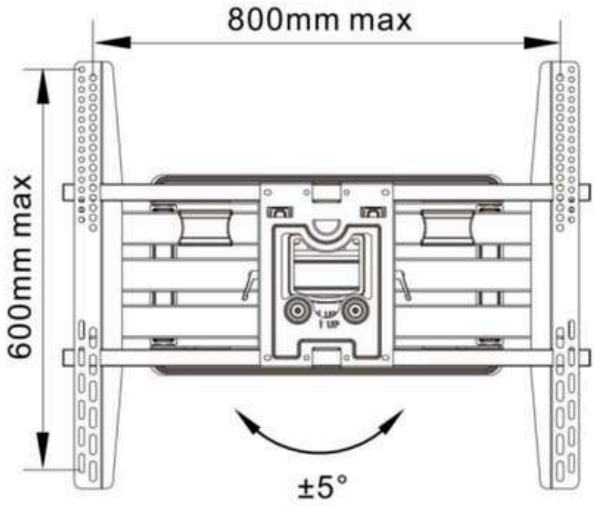

Fit Screen Size: 75"-110"

350

NB-P6



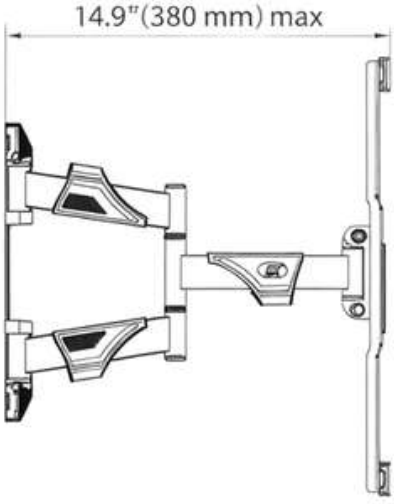

Fit Screen Size: 40”-80”

115

NB-P65



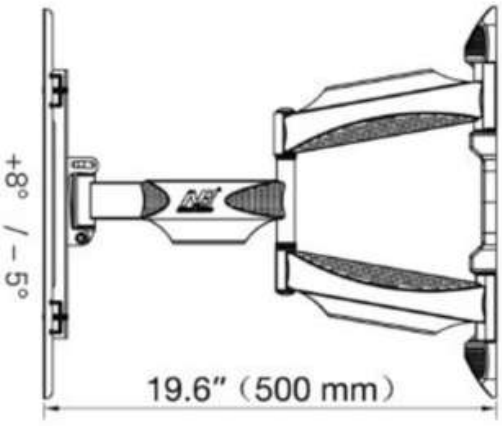

Fit Screen Size: 55”-85”

145

TV WALL MOUNT

HMD-531



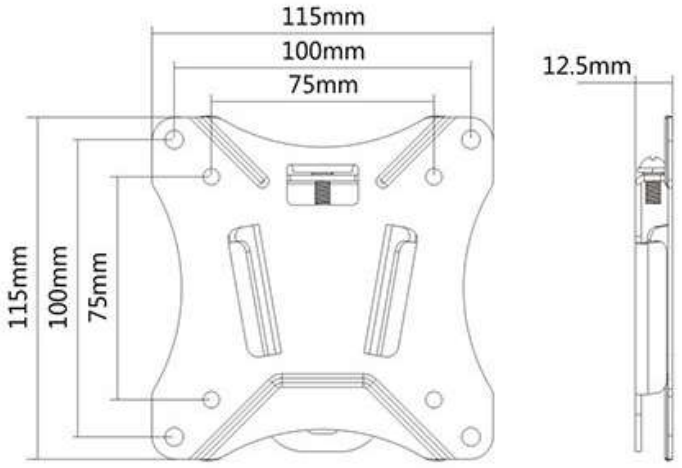

Fit Screen Size: 13"-27"

30

HMD-532



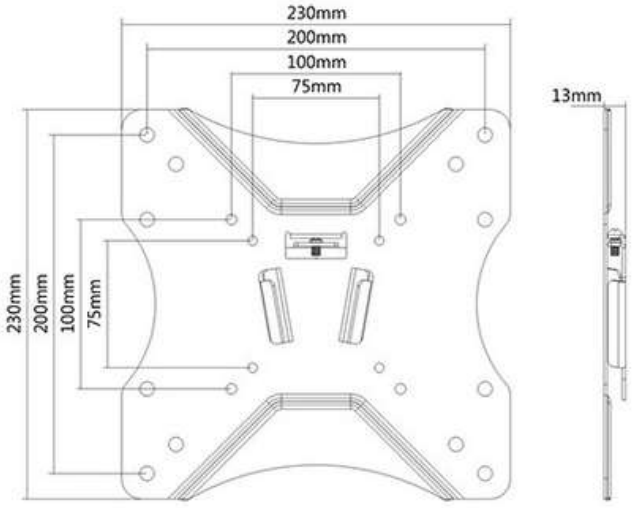

Fit Screen Size: 23”-42”

35

HMD-533



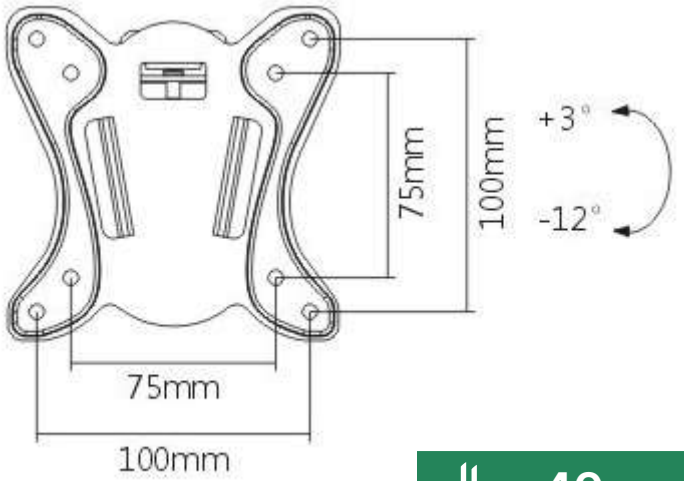

Fit Screen Size: 13"-27"

40

TV WALL MOUNT

HMD-400



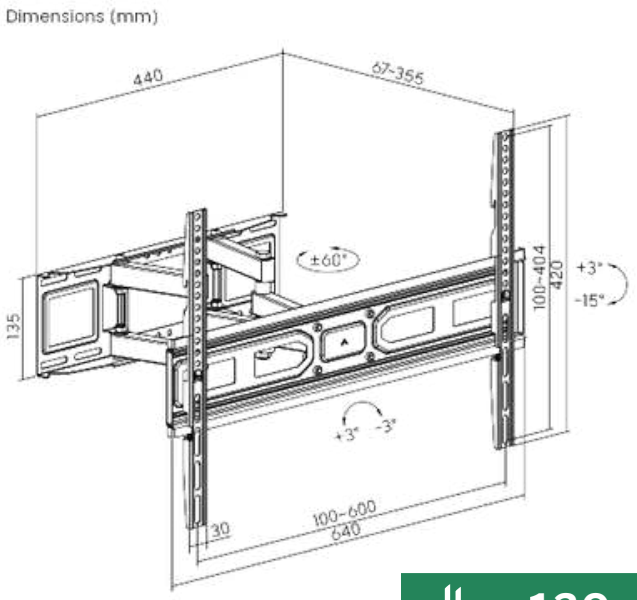

Fit Screen Size: 37"-80"

130

HMD-500

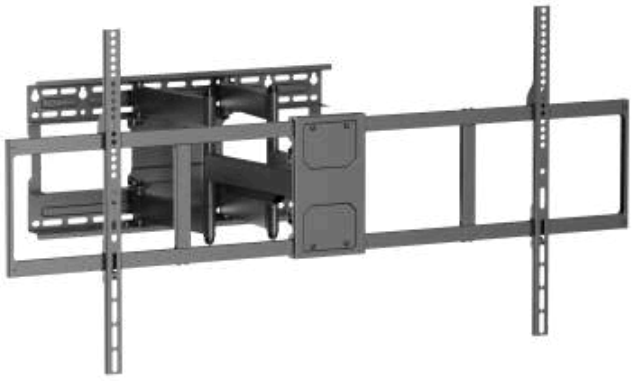

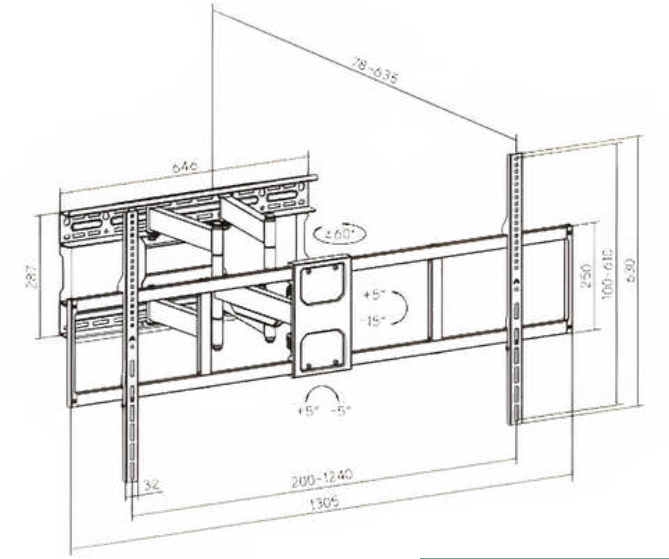

Fit Screen Size: 60”-140”

490

HMD-0076



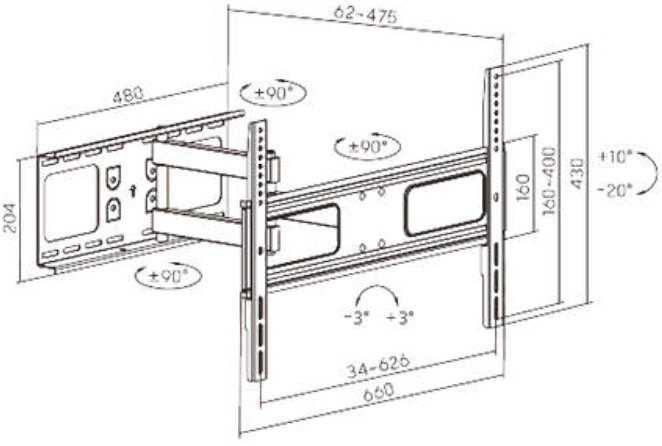

Fit Screen Size: 37”-86”

170

TV WALL MOUNT

GT-160





Fit Screen Size: Upto 120"

৳ 650

HAM-1075



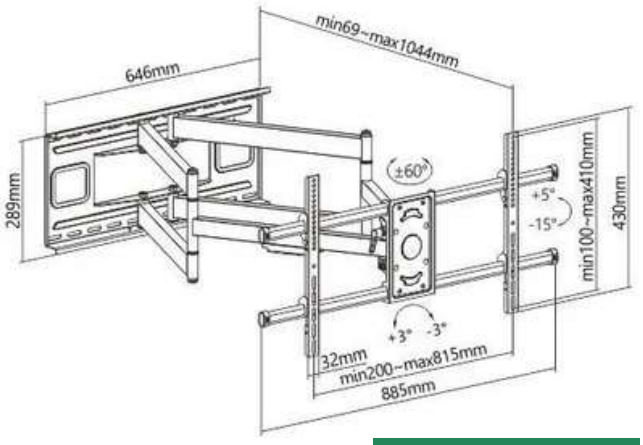

Fit Screen Size: 43"-90"

৳ 460

HAM-888

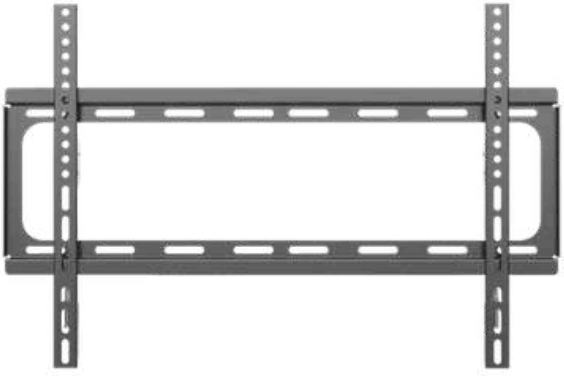

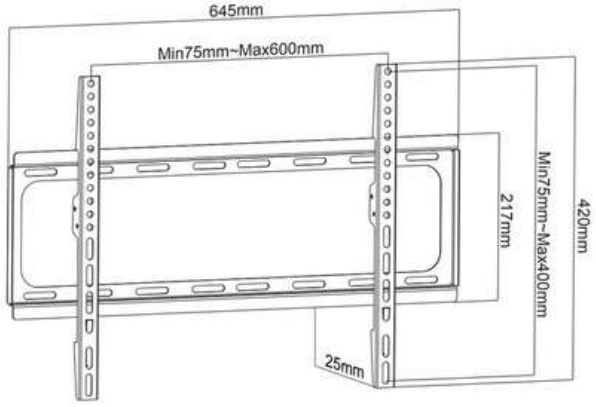

Fit Screen Size: 32"-70"

৳ 40



www.hamoodtv.com
sales@hamoodtv.com
+966 591690076