NEW CATALOGUE

HAMOOD TABLET MOUNT



www.hamoodtv.com
sales@hamoodtv.com
+966 591690076


9:41


MENU

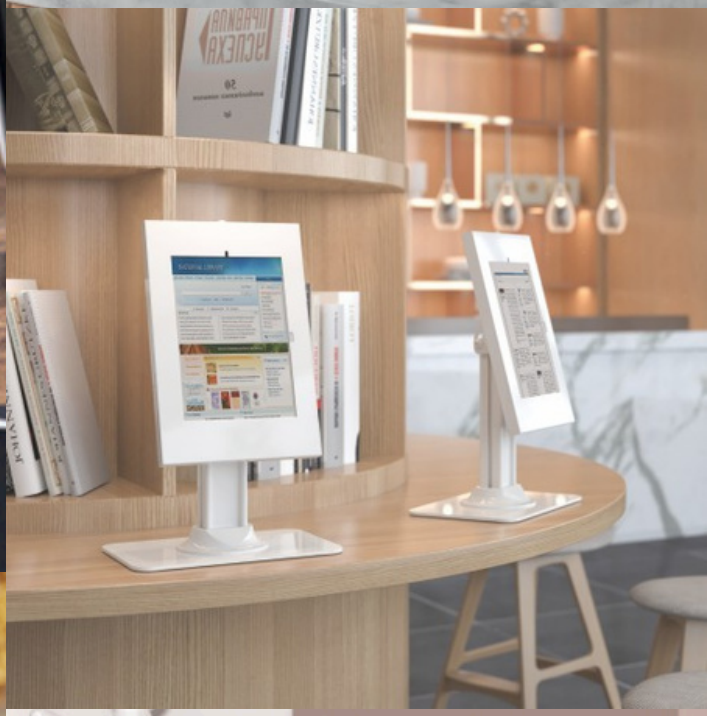







MODERN TABLET MOUNT

Let’s Explore Our Range

TABLET MOUNT

PAD12-05AL

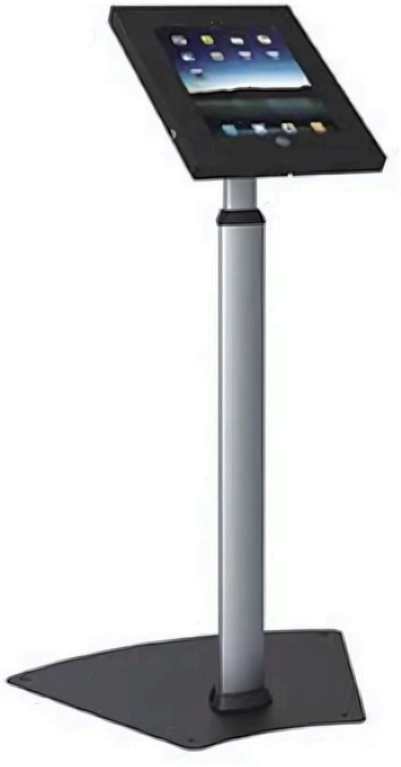

280

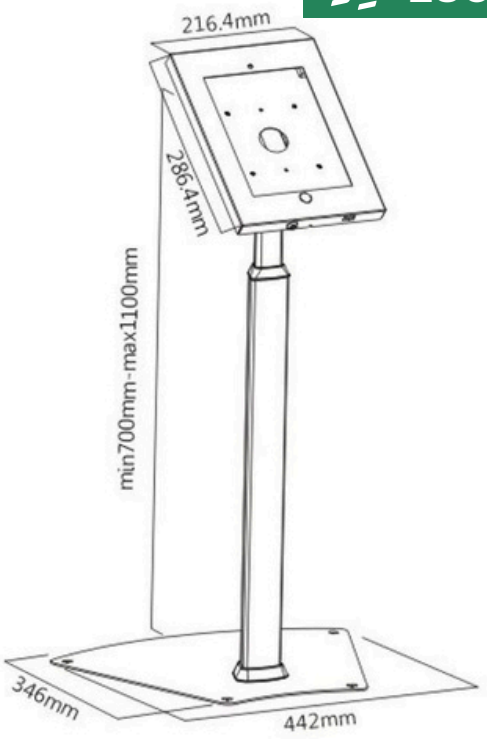

Applicable iPads
iPad2/3/4/Air

Compatible With VESA
4x4" (100X100 mm)

Height Adjustable
28.5x44.9" (700-1100 mm)

HMD-401



180

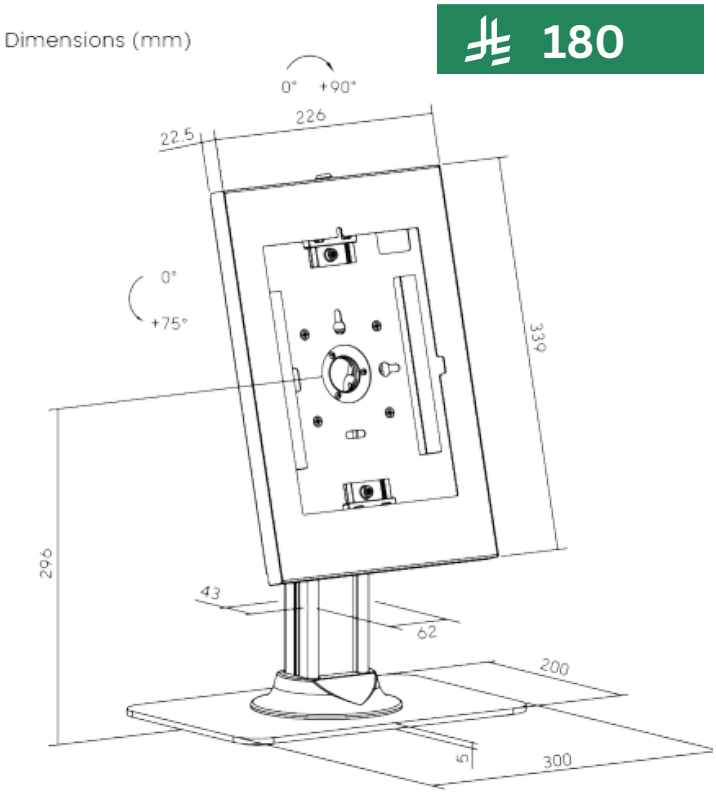

Applicable iPads
iPad 5,iPad 9,iPad Pro(9.7"; 10.5"; 11"),iPad Air(9.7"; 10.5"; 10.9"),iPad 7,Samsung Galaxy Tab A 10.1 (2019),iPad 8,Samsung Galaxy Tab A7,Samsung Galaxy Tab S6 Lite 10.4",iPad 6,iPad 10 (10.9")

Dimensions
300x200x469mm
(11.8"x7.9"x18.5")

Weight Capacity
1kg (2.2lbs)

TABLET MOUNT

HMD-402

150



Dimensions (mm)

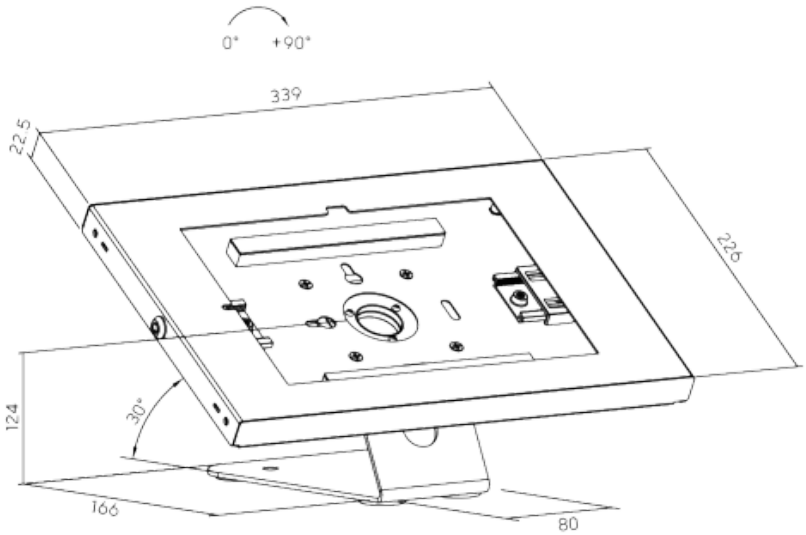

Applicable iPads

iPad Pro(9.7"; 10.5"; 11"),Samsung Galaxy Tab A 10.1 (2019),Samsung Galaxy Tab S6 Lite 10.4",iPad 6,iPad 9,Samsung Galaxy Tab A7,iPad 8,iPad Air(9.7"; 10.5"; 10.9"),iPad 7,iPad 5,iPad 10 (10.9")

Dimensions

343x206x186mm
(13.5"x8.1"x7.3")

Weight Capacity

1kg (2.2lbs)

HMD-403

160



Dimensions (mm)

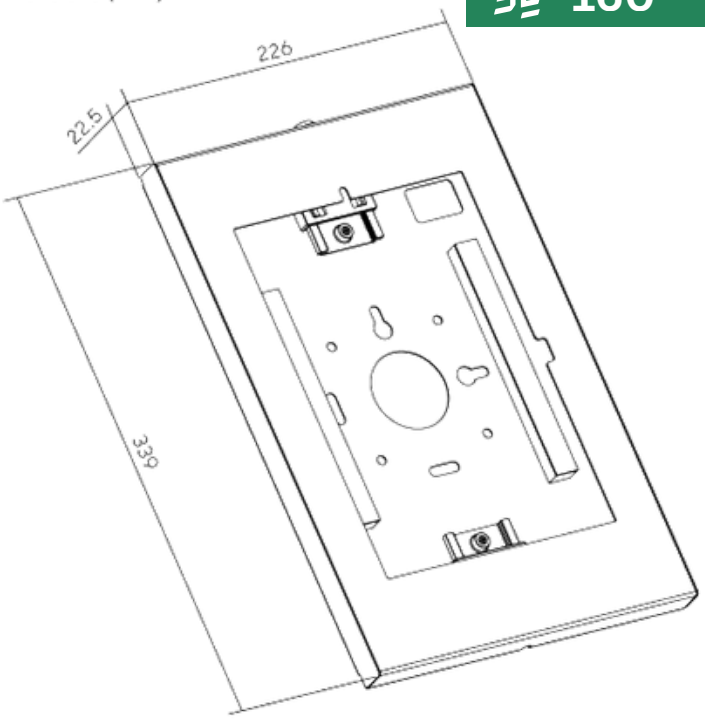

Applicable iPads

iPad 5,iPad Pro(9.7"; 10.5"; 11"),iPad Air(9.7"; 10.5"; 10.9"),iPad 9,Samsung Galaxy Tab S6 Lite 10.4",iPad 7,iPad 6,Samsung Galaxy Tab A 10.1 (2019),Samsung Galaxy Tab A7,iPad 8,iPad 10

Dimensions

226x343x22.5mm
(8.9"x13.5"x0.89")

Weight Capacity

1kg (2.2lbs)

TABLET MOUNT

HMD-404

35



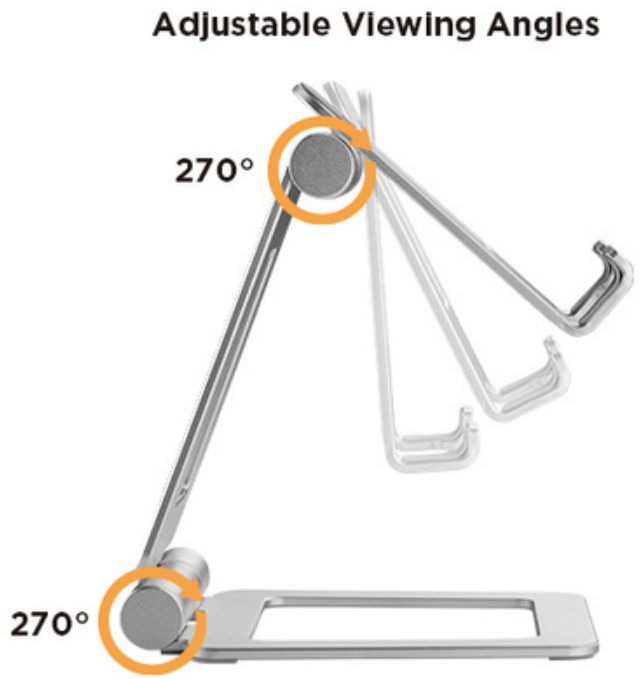

Applicable Devices
Smartphone & Tablet (≤10'')

Dimensions
145x92x24mm
(5.7"x3.6"x0.94")

Capacity
Phone Stand

HMD-405

55



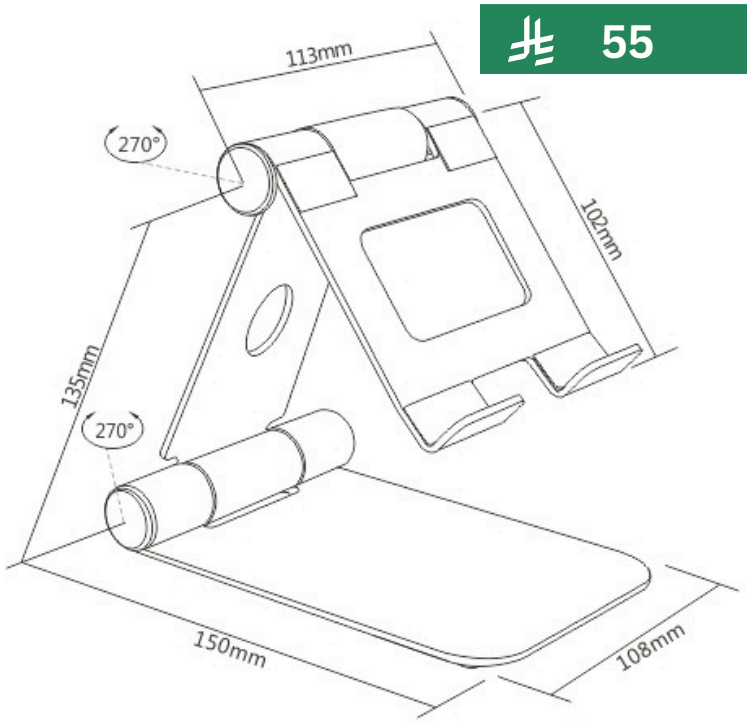

Applicable iPads
Universal

Dimensions
160x108x30mm
(6.3"x4.3"x1.2")

Fit Screen Size:
4"-13"

TABLET MOUNT

HMD-406

60



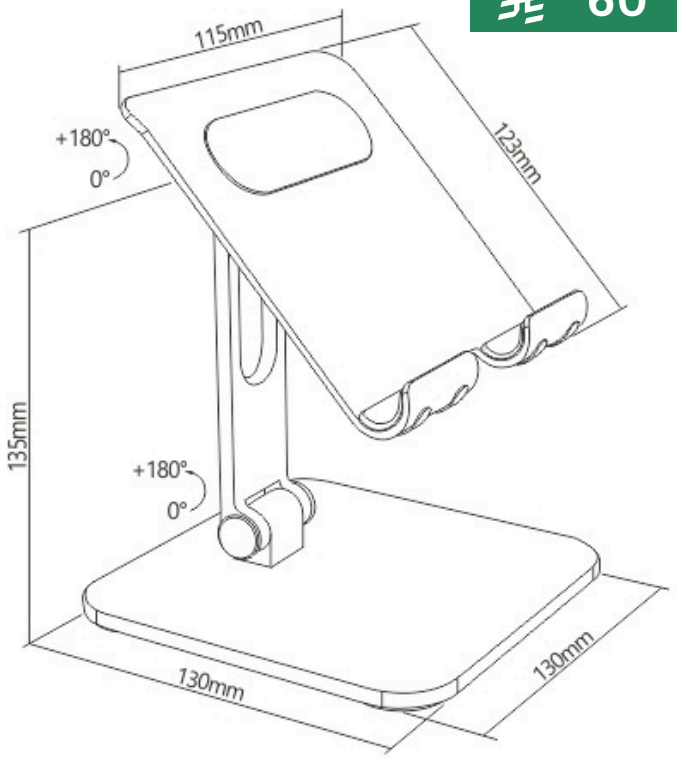

Applicable Devices
Universal

Dimensions
180x128x47mm
(7.1"x5"x1.9")

Fit Screen Size:
4"-13"

HMD-407

190



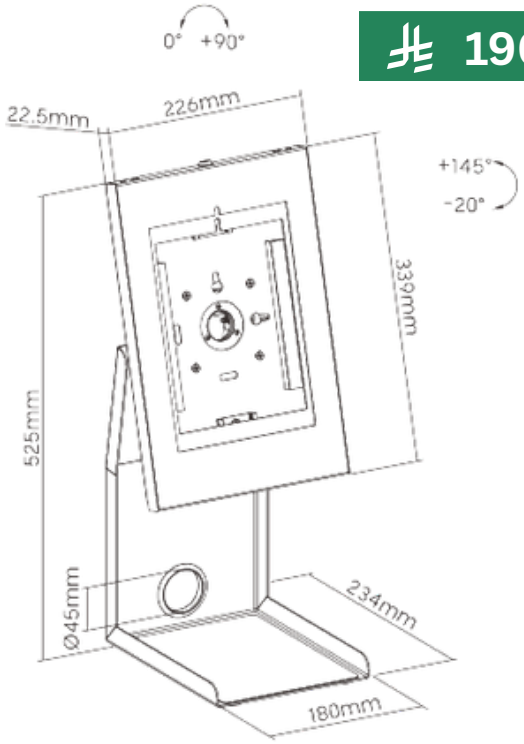

Applicable iPads
iPad Pro(9.7"; 10.5"; 11"),iPad 6,iPad 8,iPad 5,iPad Air(9.7"; 10.5"; 10.9"),iPad 7,iPad 9,Samsung Galaxy Tab A 10.1 (2019),Samsung Galaxy Tab S6 Lite 10.4",Samsung Galaxy Tab A7

Dimensions
180x234x525mm
(7.1"x9.2"x20.7")

Weight Capacity
1kg (2.2lbs)

TABLET MOUNT

HMD-409



Dimensions (mm)

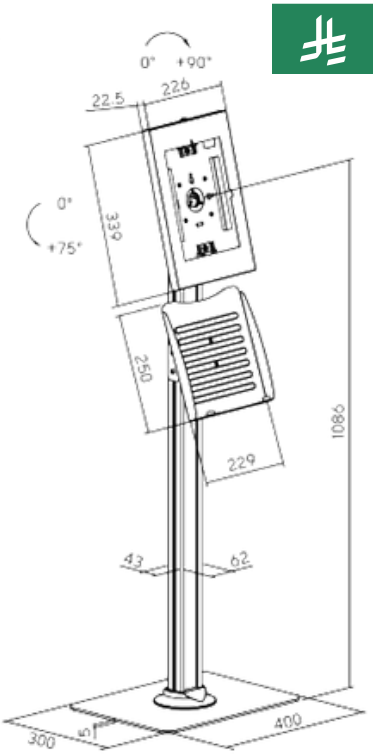

290

Applicable Devices

iPad Air(9.7"; 10.5"; 10.9"),iPad Pro(9.7"; 10.5"; 11"),Samsung Galaxy Tab A7,iPad 6,Samsung Galaxy Tab S6 Lite 10.4",iPad 9,iPad 8,Samsung Galaxy Tab A 10.1 (2019),iPad 5,iPad 7,iPad 10 (10.9'')

Dimensions

400x310x1110.5~1259.5mm
(15.7"x12.2"x43.7"~49.6")

Weight Capacity

1kg (2.2lbs)



www.hamoodtv.com
sales@hamoodtv.com
+966 591690076