HMD-814

Full Motion TV Mount

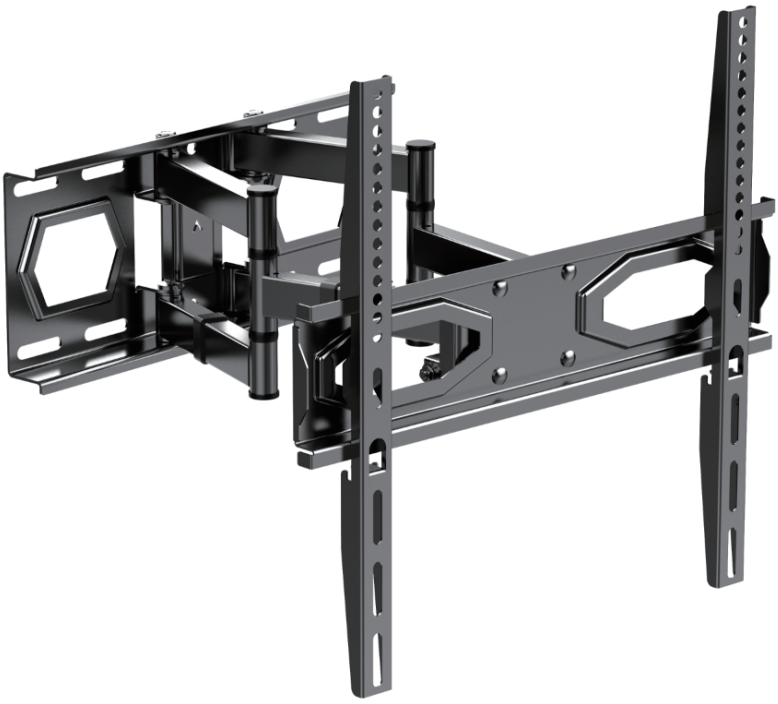

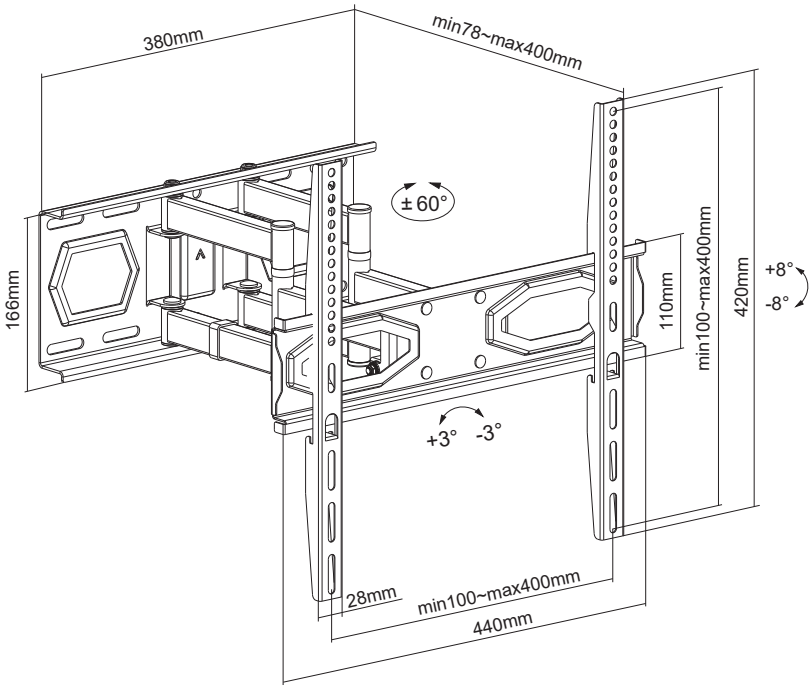

TV	Screen Size	VESA Compatible	Tilt Range	Profile	Level
40kg/88lbs	32”-70”	Max. 400x400	+8° ~ -8°	78-400mm	+3°~-3°